TM-9130-12

U.S. MARINE CORPS TECHNICAL MANUAL

FUEL HANDLING PROCEDURES
(LIQUID FUELS)

NOVEMBER 1977

PCN 182 900130 00

DEPARTMENT OF THE NAVY
Headquarters, U.S. Marine Corps
Washington, D.C. 20380

11 November 1977

This manual/change is an authorized technical publication issued in accordance with MCO 5215.14.

BY DIRECTION
OF THE COMMANDANT OF THE MARINE CORPS

OFFICIAL

COLONEL J. W. DRESELY
Head, Logistics Management Branch
Materiel Division
Installations and Logistics Department

DISTRIBUTION: AJ3

Reproduction for non-military use of the information or illustrations contained in this publication is not permitted. The policy for military use reproduction is established for the Army in AR 380-5, for the Navy and Marine Corps in OPNAVINST 5510.1B, and for the Air Form in Air Force Regulation 205-1.

LIST OF EFFECTIVE PAGES

Insert latest changed pages: dispose of superseded pages in accordance with applicable regulations.

NOTE: On a changed page, the portion of the text affected by the latest change is indicated by a vertical line, or other change symbol, in the outer margin of the page. Changes to illustrations are indicated by miniature pointing hands. Changes to wiring diagrams are indicated by shaded areas.

Total number of pages in this manual is 148, consisting of the following:

Page No	Change No
A	0
B Blank	0
i	0
ii Blank	0
iii – xiv	0
1-1 – 1-8	0
2-1 – 2-7	0
2-8 Blank	0
3-1 – 3-15	0
3-16 Blank	0
4-1 – 4-9	0
4-10 Blank	0
5-1 – 5-37	0
5-38 Blank	0
6-1 – 6-20	0
7-1 – 7-14	0
A-1	0
A-2 Blank	0
B-1 – B-2	0
C-1 – C-4	0
D-1	0
D-2 Blank	0
Index 1 – Index 8	0

• Zero in this column indicates an original page.

RECORD OF CHANGES

CHANGE NO.	DATE	TITLE OR BRIEF DESCRIPTION	ENTERED BY

FOREWORD

This manual provides information and guidance for first echelon operators and organizations who transfer liquid fuels from bulk tanks to smaller containers or to user-vehicle tanks. Higher levels of maintenance are not included, and a basic knowledge of fuel-dispensing equipment is assumed. The dangers in handling fuels and how to avoid them, fire extinguishing, and quality control to prevent fuel contamination are covered as essential safety-related parts of the fuel handler's duties.

TABLE OF CONTENTS

Section Page

LIST OF ILLUSTRATIONS vii

LIST OF TABLES viii

SAFETY SUMMARY ix

CHAPTER 1. FUEL HANDLING HAZARDS

I FIRE AND EXPLOSION 1-1

1-1. General 1-1
1-2. Causes of Fires. 1-1
1-3. Fire Prevention. 1-2

II HEALTH AWARDS 1-4

1-4. General 1-4
1-5. Dusts 1-5
1-6. Gases and Vapors 1-5
1-7. Liquids 1-6
1-8. Fumes and Mists 1-6
1-9. Oxygen Deficiency. 1-6
1-10. Safeguards and Precautions . . . 1-7

CHAPTER 2. FIRE EXTINGUISHING

I CONTROLLING FIRES 2-1

2-1. Elements of a Fire 2-1
2-2. Control of Fuel. 2-1
2-3. Control of Heat. 2-2
2-4. Control of Air 2-2
2-5. Classes of Fires 2-3

II FIRE EXTINGUISHERS. 2-5

2-6. General 2-5
2-7. Soda-Acid. 2-5
2-8. Foam 2-5
2-9. Carbon Dioxide. 2.5
2-10. Dry Chemical 2-5
2-11. Water 2-6
2-12. Use and Maintenence of Hand Extinguishers. 2-6
2-13. Twin-Agent Fire Extinguisher . . 2-7

CHAPTER 3. FUEL CONTAMINATION AND QUALITY CONTROL

I INTRODUCTION 3-1

3-1. Fuel Contamination 3-1
3-2. Quality Control 3-1

TABLE OF CONTENTS - Continued

Section Page

II DEFINITIONS 3-1

3-3. Clean 3-1
3-4. Bright 3-1
3-5. Cloud 3-1
3-6. Existent Gum 3-1
3-7. Microbiological Growth. 3-2
3-8. Sediment 3-2

III FIELD TESTS OF FUEL QUALITY. 3-4

3-9. The Appearance Test 3-4
3-10. The Gravity Test. 3-9
3-11. Testing Intervals 3-12

IV AIDS TO QUALITY CONTROL 3-12

3-12. Settling Time 3-12
3-13. Recirculation 3-12

V CHANGING FUEL TYPES. 3-14

3-14. Flushing the System 3-14

CHAPTER 4. BULK FUEL DELIVERY TO SMALLER CONTAINERS

I FUEL CONTAINERS 4-1

4-1. Five-Gallon Military Gasoline Can 4-1
4-2. Fifty-Five-Gallon Drum. 4-3
4-3. Cleaning Containers 4-4
4-4. Container Data. 4-4

II FILLING AND EMPTYING CONTAINERS. 4-4

4-5. Precautions 4-4
4-6. Fill Level 4-6
4-7. Filling Procedures. 4-8
4-8. Emptying Cans and Drums 4-8

CHAPTER 5. TAFDS (TACTICAL AIRFIELD DISPENSING SYSTEM) OPERATIONS

I TAFDS COMPONENTS 5-1

5-1. General 5-1
5-2. Tank Chest 5-1
5-3. Tanks 5-1
5-4. Hose Assemblies and Associated Equipment 5-1
5-5. Pump, 350 gpm 5-5

TABLE OF CONTENTS - Continued

Section Page

5-6. Filter-Separator. . , ... 5-5
5-7. Fuel Monitor 5-5
5-8. Meter 5-5

II PREPARATION FOR USE. 5-6

5-9. General 5-6
5-10. Site Selection and Preparation. . 5-6
5-11. Installation. 5-8
5-12. Assembly 5-9

III OPERATING INSTRUCTIONS 5-11

5-13. Tank and Associated Equipment . . 5-11
5-14. Pump, 350 gpm 5-17
5-15. Filter-Separator. 5-23
5-16. Fuel Monitor 5-28
5-17. Meter 5-29
5-18. Operation Under Other Than Normal Conditions 5-30
5-19. Full System Operation 5-30

IV HERS (HELICOPTER EXPEDIENT REFUELING SYSTEM) 5-34

5-20. General 5-34
5-21. Physical Description. 5-34
5-22. Functional Description. 5-35
5-23. HERS Operations 5-36

V SECURING SYSTEM FOR REUSE , STORAGE, OR MOVEMENT 5-36

5-24. General 5-36
5-25. Disassembly Procedures. 5-36

VI DEMOLITION 5-37

5-26. General 5-37
5-27. Demolition by Mechanical Means. . 5-37
5-28. Demolition by Misuse. 5-37
5-29. Demolition by Explosives or Weapons Fires 5-37

CHAPTER 6. AAFS (AMPHIBIOUS ASSAULT FUEL SYSTEM) OPERATIONS

I AAFS COMPONENTS 6-1

6-1. General 6-1
6-2. Tanks 6-1

TABLE OF CONTENTS - Continued

Section Page

6-3. Hoses, Couplings, and Valves. . . 6-1
6-4. Trailer-Mounted Pump. 6-1
6-5. Pressure Regulator. 6-1
6-6. Meter-Register. 6-2
6-7. Filter-Separator. 6-2
6-8. Fuel Monitor. 6-2
6-9. General Repair Kit. 6-2

II PREPARATION FOR USE 6-2

6-10. General 6-2
6-11. Technical Considerations 6-2
6-12. Site Preparation 6-4
6-13. Installation. 6-4

III OPERATING INSTRUCTIONS 6-9

6-14. Tanks 6-9
6-15. Trailer-Mounted 600 gpm Centrifugal Pump. 6-9
6-16. Pressure Regulator. 6-12
6-17. Meter-Register. 6-15
6-18. Filter-Separator. 6-17
6-19. Fuel Monitor 6-19
6-20. Operation Under Other Than Normal Conditions 6-19
6-21. Securing System for Reuse, Storage, or Movement. 6-19
6-22. Demolition. 6-19

CHAPTER 7. REFUELER TRUCK OPERATIONS

I INTRODUCTION 7-1

7-1. General 7-1
7-2. Operator Qualification. 7-1
7-3. Safety Precautions. 7-1
7-4. Personnel Responsibilities and Duties 7-2

II OPERATOR CHECKS AND SERVICES 7-6

7-5. Preoperational Checks 7-6
7-6. Weekly Checks . . . . . , ... 7-6

III M49A2C TANK TRUCK. 7-6

7-7. General 7-6
7-8. M49A2C Operations 7-6

TABLE OF CONTENTS - Continued

Section Page

IV M857 FUEL SERVICING TANK SEMITRAILER

7-9. General 7-10
7-10. M857 Operations. 7-11

V REFUELING 7-13

7-11. Defueling Procedures 7-13

VI EMERGENCY PROCEDURES. 7-14

7-12. General 7-14
7-13. Fire 7-14
7-14. Demolition 7-14

APPENDIX A. REFERENCES. A-1

APPENDIX B. M8S7 CHARACTERISTIC DATA. . . . B-1

APPENDIX C. REFUELER TRUCK DAILY CHECK-LIST C-1

APPENDIX D. PRESSURE DROP LOG D-1

LIST OF ILLUSTRATIONS

Number Page

2-1. The Fire Triangle 2-1
3-1. Relative Sizes of 5- and 10-Micron Particles and Human Hair 3-2
3-2. Relative Sizes of S-Micron Particles and Openings in No. 200 and No. 400 Wire Screens. 5-5
3-3. Variation of Specific Gravity with Temperature ..,..... 3-9
4-1. Five-Gallon Gasoline Can. 4-2
4-2. Fifty-Five Gallon Drum. 4-2
4-3. Closures of 55-Gallon Drum. 4-5
4-4. Fill Levels for 5-Gallon Cans and 5S-Gallon Drums 4-7
5-1. Schematic of TAFDS. 5-2
5-2. Fuel Flow Diagram 5-24
6-1. Tank Farm Arrangement 6-5
6-2. Berm Construction 6-6
7-1. Tank Vehicle Positioning for Aircraft Refueling 7-3

LIST OF TABLES

No.		Page
2-1	Types of Fire Extinguishers.	2-4
3-1	Color Code of Fuels.	3-4
3-2	Contamination Table.	5-5
3-3	Sediment Contmination Limits. . . .	3-8
3-4	Water Contamination Limits	3-9
3-5	Specific and API Gravity Ranges for Fuels	3-11
3-6	Fuel Content of Hose	3-13
3-7	Cleaning Required Prior to Changing Fuel Types	3-15
4-1	Data on Standard Fuel Containers . .	4-5
5-1	10,000-Gallon Tank, Hose, and Tank Accessories Data . . , ...	5-3
5-2	Tank Serviceability Standards. . . .	5-13
5-3	Preventive Maintenance Services. . .	5-18
5-4	Pump, 350 gpm, Centrifugal, Trailer-Mounted, Specifications.	5-21
5-5	Filter-Separator Data.	5-23
5-6	Fuel Monitor Data.	5-28
5-7	Meter Data	5-29
5-8	Operation Under Other Than Normal Conditions.	5-31
6-1	AAFS Components	6-1
6-2	AAFS Tank and Hose Data.	6-7
6-3	AAFS Pump and Engine Data.	6-10
6-4	Pump Operator's Daily Services . . .	6-10
6-5	Pressure Regulator Data.	6-13
6-6	Pressure Regulator Operator's Daily Services	6-14
6-7	Three-Inch Meter-Register Data	6-16
6-8	Two-Inch Meter-Register Data	6-16
6-9	Filter-Separator Data	6-17
6-10	Filter-Separator Operator's Daily Services	6-20
7-1	Valve Positions, M857 Fuel Transfer Operations	7-12

SAFETY SUMMARY

The following are general safety precautions related to liquid fuel handling that should be understood and used to prevent accidents or damage to equipment.

Do not conduct fuel handling operations in a hangar, shop, or other confined area.

Keep all fuel containers, whether full or empty, tightly closed except when in use.

Avoid spilling fuel; clean up spills at once if they happen. Wipe up small spills or cover with dirt. Follow local emergency procedures for large spills. Treat the area as dangerous until the vapors have gone.

Inspect equipment often for leaks. Report leaks to the proper authorities. Do not operate leaky equipment.

Dispose of oily waste or rags immediately after using by placing in a self-closing metal container.

Beware of empty (or apparently empty) cans, drums, tanks, and hoses that formerly held fuel . Vapors can remain long after the container has been emptied, and the fuel-air mixture is more dangerous if ignited than the liquid alone.

Open drums slowly, especially if they have been shaken or exposed to heat, to prevent a fuel-air mixture from spewing out.

Fuel vapors are heavier than air and will collect in low places such as pits or sumps; be especially careful in such areas.

Never use liquid fuels as cleaning fluids for floors, equipment, clothing, etc.

Prohibit smoking except in designated areas . Prohibit matches and lighters in hazardous areas.

Stop all fuel handling operations during electrical storms.

Use only flashlights, drop lights, or lanterns approved for use in hazardous locations.

Use only explosion-proof electrical equipment and fixtures in hazardous areas; inspect often and correct any conditions that coul d cause sparking, arcing, or overheating.

Open switches and pull fuses before doing essential work on electrical equipment.

Equipment requiring welding and cutting operations must be clean and vapor-free; heaters, welding torches, or blowtorches must not be used within 50 feet of fuel handling operations.

Vehicles carrying fuel as cargo and those operating w 1 thin 50 feet of fuel handling operations must be equipped with a spark-arresting exhaust system.

Bonds and grounds should be tested frequently to ensure conductivity; repair or replace defective parts .

Do not wear shoes with exposed nails, metal plates, or hobnails.

Do not carry or wear exposed metal objects, such as knives, keys, or loose identification bracelets that could cause sparks if struck or dropped.

Protective earthworks (berms) around collapsible tanks should be built to give the least possible exposed fuel surface in case of tank rupture. A small 1 area generates the east vapor, and provides the smallest burning surface in case of fire.

Never use fuels to wash the hands.

Wear nonstatic-producing clothing, with shirt-sleeves rolled down and buttoned, and shirttails tucked in.

Do not carry or wear loose items of clothing.

Keep shirt pockets empty.

Wear leather gloves and all-leather, rubber-soled boots for splash protection.

Use ear-protective devices near operating aircraft engines or other high-noise sources.

Avoid getting fuel on the skin; wash fuel from the skin as soon as possible with soap and water.

If fuel gets into the eyes or mouth, flush thoroughly with water (avoid swallowing) , and get medical aid immediately.

Devices on fuel nozzles that al low unattended operation must be disabled.

Fire fighting equipment, including protective clothing, must be in good condition and readily available.

Water alone should not be used on fue 1 fires since it tens to spread the fire.

Bonds and grounds must be made before fue 1 flow begins, and must not be broken until flow ends.

When parked, refueler vehicles should be at least 2.5 feet apart in groups of three or less, with 100 feet between groups.

Keep refuelers out of aircraft paths.

Do not throw or drag hoses and nozzles; avoid kinking hoses.

Turn off aircraft radio and radar equipment during fueling or defuel ing.

Do not conduct fueling operations within 300 feet of active ground radars.

Keep equipment cabinets of refuel er/defue ler trucks clean.

Aircraft to be refueled or defueled must be dearmed and not have hot brakes.

Never drive a refueler/defueler directly toward an aircraft.

Do not back into position if it can be avoided. When backing nut be done, stop at least 25 feet away from the aircraft and use a guide on foot to direct the final approach.

The refuel/defuel position must leave the vehicle an open getaway path.

The type of fuel in a refueler must be checked by the refueler operator and the loader to make sure it is the type required.

Do not clip ground wires to antennas, rotor blades, or propeller blades.

Keep clear of rotor blades, propeller blades, and their paths.

Keep the refueling area clear of loose material that could be blown about by prop wash, jet blast, or rotor wash.

Tankers used to accept fuel removed from vehicles or aircraft will be plainly marked DEFUELERS . A vehicle marked REFUELER will not be used to remove fuel from a using vehicle unless it is specifically authorized, nor will a vehicle marked DEFUELER be used to fuel vehicles.

At least two persons are required in defuel ing operations.

Refuel ing/defueling areas must be free of all possible ignition sources.

In defueling, the defueler operator must check with the unloader (crew chief, plane captain, lineman, etc.) to be sure the correct aircraft is being unloaded, that all electrical equipment is off, and no repair work is being done.

Bonds and grounds must be made before defueling begins, and must not be broken until fuel flow stops.

Fire extinguishing equipment must be in place and ready during refuel ing/defueling, including crash crew standby assistance if available.

If a fire breaks out during fueling operations, the first action is to shut off fuel flow by stopping pumps. Dropping a deadman control will stop the pump in those units so equipped. Second, move the refueler/defueler away from the fire to a safe area.

The following warnings appear in the manual text:

WARNING

Never suck fuel into a siphon tube with the mouth. (Page 4-9.)

WARNING

Use caution in handling used filter-separator cartridges because of the toxic effects of the fuel additives concentrated on the filter elements. (Page 5-27.)

WARNING

A filter-separator must be grounded before operation to prevent static electricity from igniting the fuel or causing an explosion. (Page 6-18.)

CAUTION

Automatic fuel nozzles may be used but devices that hold the nozzle open must be disabled or removed to require holding the nozzle open by hand while dispensing fuel . (Page 1-2.)

CAUTION

To remove fuel-soaked clothes, move away from a refueling area, since motion of the clothes can build up a static charge and cause sparks. Wet clothes before removing, if possible, or ground your body by grabbing a piece of grounded equipment with both hands. (Page 1-8.)

CAUTION

Do not use water on or near electrical equipment unless it is absolutely certain that electric power has been shut off. (Page 2-6.)

CAUTION

Before flushing a fuel dispensing system with water, disconnect filter-separator and fuel monitor assemblies. (Page 3-15.)

CAUTION

Do not try to spin the 350 gpm TAFDS pump engine with the crank. (Page 5-22.)

CAUTION

Do not expose filter-separator cartridges to moisture. Keep in waterproof bags until installed. Do not install in the open during bad weather. (Page 5-27.)

CAUTION

Ear protective devices shall be worn at all times when near operating aircraft engines. (Page 5-33.)

CAUTION

If the AAFS/TAFDS 600 gpm pump engine fails to start, wait until the cranking motor stops turning before pressing the starter button again to avoid damaging the cranking motor. (Page 6-11.)

CAUTION

In temperatures below 40° F, if the starting aid is used for the 600 gpm pump, do not actuate more than once with the engine stopped. More than one actuation will overload the engine air housing with the starting aid fluid and could cause an explosion. (Page 6-12.)

CAUTION

During fuel transfer operations with the M857 semitrailer: (Page 7-12.)

a. In an emergency, close emergency valve A (roadside compartment) or pull the remote emergency valve shut off on the opposite (curb) side.

b. Check the filter-separator pressure differential regularly and reset the pressure indicater to 0.

c. Start the engine before opening valves. Use high engine speed only to obtain maximum flow.

d. Do not exceed 100 gpm through the filter when pumping diesel fuel.

CHAPTER 1

FUEL HANDLING HAZARDS

SECTION [

FIRE AND EXPLOSION

1-1. GENERAL. Liquid fuels are dangerous materials to handle as they vaporize easily and burn rapidly. They can be handled safely, but only if the proper precautions are always taken as a matter of habit. A fire is the slow burning of fuel; an explos ion is the instantaneous burning of fuel, ❑ ixed with the right amount of air. For example, 5 gallons of gasoline mixed with the proper amount of air can explode with the force of about 415 pounds of dynanitc.

1-2. CAUSES OF FIRES. All fuel fires are caused by fuel vapors being ignited by some source of heat. Vapors are always produced when fuel is handled, so the best fire prevention is to control ignition sources. The most common ignition sources are:

a. SMOKING AND MATCHES. Smoke only in designated areas at least 50 feet from fuel handling and storage areas; do not carry smoking mater ials, matches, or lighters in pockets when handling fuel.

b. POOR HOUSEKEEPING. Rubbish furnishes tinder that can be ignited by small heat sources such as sparks; use closed metal containers and empty them frequently; clear grass and weeds from fuel-handling areas.

c. MECHANICAL OR FRICTION SPARKS. Use of tools and grinding wheels must be careful ly controlled to prevent rubbish or vapors from being ignited by sparks.

d. ELECTRICAL EQUIPMENT. Hazards come from arcing, sparking, or overheating; do not overload circuits. Use explosion-proof equipment.

e. STATIC ELECTRICITY. Static electricity is always produced when fluids, especially fuels, flow; prevent build-up by bonding and grounding. Bonding is the connection of two conductive objects to equalize the electric charge between them; it does not drain off the static. Grounding is the connection of a piece of equipment to the earth with a cable so that the electric charge will be drained off. A bare metal surface of the equipment

must be joined by the cable to a metal rod driven far enough into the earth to reach the level of permanent ground moisture. Bonds and grounds must be made before fuel flow begins, and must not be broken unt i 1 after fuel flow stops.

f. SPONTANEOUS HEATING . This is caused by a chemical reaction that produces heat without external heat being applied. If the heat becomes high enough, ignition occurs, called spontaneous combustion. The most common source is oil-soaked or paint-soaked rags. Prevent spontaneous combustion by collecting such rags in airtight containers until disposed of.

g. WELDING AND CUTTING OPERATIONS. Heat from welding or cutting can produce vapors from residual fuel that can be igited by the open torch flame and/or the hot slag and metal particles. Al 1 fue 1 containers must be clean and vapor-free before welding or cutting is done.

1-3. FIRE PREVENTION. The most serious accidents are caused by the ignition of vapor-air mixtures. Fires are prevented by controlling vapor formation and control ling sources of ignition.

a. CONTROLLING VAPOR FORMATION .

(1) Avoid spills from any source.

CAUTION

Automatic fuel nozzles can be used; but lock-open or latch-open devices that al low unattended operation must be modified so that the dispensing nozzles must be held open by hand and attended while dispensing fuel.

(2) Use drip pans, catch basins, or noncombustible absorbent materials (such as dirt) where spills may occur.

(3) Frequent 1 y inspect al 1 equipment for leaks. Take immediate action to repair leaks found.

(4) If leaks or spills do happen, clean them up at once by washing or covering. Treat area as hazardous until vapors are gone.

(s) Beware of vapors in empty hoses, pipes, tanks, cans, or any container. An empty container that once contained fuel can be more dangerous than a full one, because

the fuel-air mixture is more explosive than the liquid alone.

(6) Inspect drums, cans, and containers before filling; mark with some sign of approval if fit for service.

(7) Keep fuel containers tightly closed, whether full or empty.

(8) Open bungs of drums slowly when they have been agitated or exposed to high temperature to prevent the sudden release of pressure and a vapor-air mixture.

(9) Beware when working in confined or unventilated spaces or pits where vapors could accumulate (they are heavier than air) .

(10) Never use gasoline or carbon tetrachloride for cleaning purposes.

(11) Coordinate tank-c leaning and vapor-freeing with other operations nearby that could be sources of ignition.

b. CONTROLLING IGNITION SOURCES .

(1) Permit smoking only in designated areas.

(2) Prohibit matches, especially the “strike-anywhere" type, and cigarette lighters in all hazardous areas.

(3) Suspend al 1 fuel loading and unloading Operations during electrical storms or when storms are nearby.

(4) Use only self-closing metal containers for oil-soaked and paint-soaked rags; dispose of such collections daily.

(5) Install only explosion-proof electrical equipment and 1 ight fixtures in hazardous areas.

(6) Use only explosion-proof extension lights, or flashlights and electrical lanterns with shatterproof lenses, for inspection and repairs in hazardous areas.

(7) Inspect electrical apparatus and fixtures frequent ly. Correct immediately any condition likely to cause sparking, arcing, or overheating.

(8) Open switches and pull fuses before doing necessary work on electrical equipment.

(9) Frequently inspect and test all bonding and grounding devices for conductivity; repair or replace defective equipment.

(lo) Coordinate all welding and cutting work near tank-c 1 caning or vapor-freeing activity so that separate operations do not become mutually hazardous.

(11) Vehicles carrying fuel as cargo must have a spark-arrester on the exhaust system or have a spark-arrester type muff1er.

(12) Protective berms (dikes) around collapsible e fuel tanks should be constructed to provide the smallest possible burning surface in case of fire. The smal 1 area also generates less vapor.

(13) clothing clothing that does not produce static, preferably cotton. Synthetic materials are active static generators, and silk and wool may be.

(14) Knives, keys, or loose identification bracelets should not be worn or carried.

SECTION II

HEALTH HAZARDS

1-4. GENERAL . All fuels can be harmful to the human body, and fuel handlers must be aware of the possible danger. The use of safeguards and precautions at all times is absolutely necessary. The hazards can be classified by their form as dust, gas or vapor, or liquid, and as to the effect on the body as toxic, anesthetic, or irritant. The bodily effects have to do with the functions of organs, tissues, and cells, and can come about by breathing contaminants into the lungs, by swallowing them, or by simple skin contact. There is no clear dividing line; a fuel product may be harmful in more than one form, and may produce a combination of effects on a person. General protective measures are discussed in paragraph 1-10 of this section.

1-5. DUSTS. Dusts are fine solid particles produced by a mechanical operation such as sending, by handling dust-producing materials, and by the evaporation or burning of liquids or sludges containing finely divided materials. Dusts are usually of three types:

a. TOXIC DUSTS. Toxic dusts injure organs and body tissues when inhaled or swallowed; some may be skin irritants. Fuel handlers come in contact with toxic lead-compound dusts in cleaning and repairing containers that have held leaded gasoline, and in burning sludge from leaded gasoline tanks. When there is enough time between exposures, the body may eliminate lead but usually the latest effects are added to those of past exposures.

b. FIBROSIS-PRODUCING DUSTS. A fibrosis-producing dust injures the lungs so that normal tissue is replaced by fibrous or scar tissue. Grinding, polishing, sanding, or sandblasting equipment operation may expose the user to this hazard.

c. NUISANCE DUSTS. Although these may not be directly harmful, nuisance dusts can cause inflammation and contribute to respiratory disease, which may be aggravated by personal allergies.

1-6. GASES AND VAPORS. The terms gas and vapor are often used interchangeably; a gas is a substance that exists as a gas at ordinary pressure and temperature, while a vapor is a gaslike form of a substance that is usually a liquid or a solid. A fuel product gas or vapor will usually have several effects; it can be anesthetic as well as toxic. These effects can be divided into four general groups.

a. POISONS. Poisonous or toxic gases and vapors may injure or destroy various organs, the blood-forming tissues, and bones. The most poisonous substance encountered by fuel handlers is the tetraethyl lead in the vapor from leaded gasoline. A safe assumption is that all flammable products are toxic to some degree.

b. ASPHYXIANTS . Asphyxiants prevent oxygen from being taken into the lungs by replacing the oxygen in the air being breathed. Examples are methane and related hydrocarbons, and the hydrogen and acetylene used in welding. Carbon monoxide, produced by fuel burning in internal combustion engines, acts. on the blood so that blood cells cannot absorb oxygen needed by the various body organs, which then fail.

c. ANESTHETICS. All fuel vapors are anesthetic; that is, they are narcotic and depress the central nervous system to the point that unconsciousness occurs and breathing may stop. The gasolines and jet fuels are among the most narcotic.

d. IRRITANTS. Irritant gases and vapors cause inflammation of the lungs and the respiratory tract. Most flammable gases and vapors have an irritant effect, whether or not they are poisonous or narcotic.

1-7. LIQUIDS. Fuel products are dangerous if taken into the mouth or swallowed, and are of main concern as skin contaminants. Fuels and solvents remove natural fats and oils from the skin, leaving harsh, dry, and chapped skin surfaces, and making it easier for infection to set in.

1-8. FUMES AND MISTS. Fumes and miscs are mentioned only to distinguish them from gases and vapors. The term fume is often used interchangeably with gas and vapor. More properly it is the gaslike result of a solid substance passing directly to a vapor without first becoming a liquid, which can then return to its original solid state. This is called sublimation and is a method of refining such substances as iodine and sulfur. Fumes are produced from the lead compounds used in leaded gasolines and paints. Fumes are then very small particles of solids, but differ from dusts in that dust cannot return to the solid forms they had before becoming dusts . Mists, or fogs, are tiny droplets of liquids produced by spraying, splashing, or some similar method. The principle involved is used in a water fog nozzle to smother fires and in certain oil burner nozzles to make fires. The oil mist resulting from flammable hydraulic fluid escaping under pressure can be a serious hazard.

1-9. OXYGEN DEFICIENCY. Oxygen deficiency is a health hazard very closely connected with fire and other health hazards in flammable products. Oxygen deficiency applies to air that does not have the normal amount of oxygen. Normal air has about 21 percent oxygen. Men working in air with 17 percent oxygen will breathe a little faster and deeper. The flame of a safety lamp goes out if the oxygen is below 16.25 percent; most men working will become dizzy and notice a buzzing in the ears, and nearly everyone has these symptoms when oxygen falls to 10 percent. Life is endangered when air has 7 percent oxygen. Because many flammable vapors are heavier than air, they will collect in pits, in confined areas, and in low spots, displacing the air and causing

oxygen deficiency. Tanks that have been unused for a period of time may lack oxygen because it has been used up in the chemical reaction of rusting.

1-10. SAFEGUARDS AND PRECAUTIONS. Simple, ordinary measures will protect the body from the harmful effects of liquid fuels:

a. AVOID CONTACT WITH FUELS.

(1) Handle fuels carefully to prevent spills or splashes.

(2) Do not use fuels as solvents to remove grease from the skin.

b. WEAR PROPER CLOTHING.

(1) Wear shirt sleeves rolled down and buttoned; keep shirt tails tucked in.

(2) Do not carry or wear loose items of clothing.

(3) Do not carry any items in shirt pockets.

(4) Wear leather gloves and all-leather, rubber-soled boots for splash protection.

(5) Wear goggles or a protective helmet with a visor for eye protection when refueling aircraft.

(6) Use ear protective devices, either earplugs or ear muffs ("Mickey Mouse ears"), when near operating aircraft engines.

c. FIRST AID.

(1) If fuel gets on the skin, wash it off immediately with soap and water.

(2) If fuel gets into the eyes or mouth, flush them repeatedly and thoroughly with water (do not swallow the water), then get medical help as soon as possible.

(3) If fuel gets on clothes, remove them promptly but carefully, wash the skin, and replace clothes with uncontaminated items.

CAUTION

Move away from a refueling area before removing fuel-soaked clothes; motion of the clothes can build up a static charge that can cause sparks. If possible, wet clothes with water before removing, or ground yourself to a piece of grounded equipment by grabbing it with both hands .

CHAPTER 2

FIRE EXTINGUISHING

SECTION I

CONTROLLING FIRES

2-1. ELEMENTS OF A FIRE. The three elements of a fire are fuel, heat, and air, making up the legs of the fire triangle, shown in figure 2-1. Removal or control of any leg of the triangle puts out the fire. With leg or

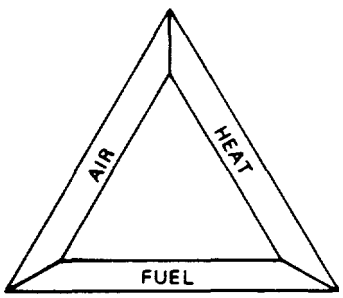

Figure 2-1. The Fire Triangle

combination of legs to remove to put out the fire depends on the situation. The "first-aid" fire extinguishers described in section II of this chapter are for immediate action use to control one or more of the fire elements. Do not, however, delay calling professional. firefighters. Most fires have small beginnings that are deceptive and can lead to over-confidence in the first-aid extinguishers.

2-2. CONTROL OF FUEL. When possible, the first step is to shut off the flow of fuel. This might apply to a burning tank that is overflowing or to a damaged or leaking fuel line or pump. It is difficult to attack a broken pressurized fuel line with any kind of extinguisher. If the break can be plugged, water may be used to wash away burning fuel until the break can be plugged. Flow must also be stopped at the nearest valve. Foam can then be used on burning pools of the fuel. Water and foam must not be used together because water wil 1 destroy effectiveness of the foam and further spread the fuel. In

the case of burning fuel, it may be a mistake to extinguish the flame before the flow is shut off. The danger of escaping gases, and a possible explosion, could be as great or greater than the spread of combustion. It may be better to direct initial efforts toward controlling any blaze in surrounding combustibles until the flow has been stopped.

2-3. CONTROL OF HEAT. Heat is transmitted by radiation, conduction, and convection. Radiation takes place in all directions; radiant heat becomes a hazard to storage tanks exposed to a blaze. In conduction, heat is transmitted through a solid or liquid substance. In convection, heated air rises from the fire and circulates to bring heat to all combustibles within reach. Water is almost indispensable in extensive and prolonged wood fires because of heat retention in embers. The most effective way to reduce heat and vaporization is by use of water in streams and spray or fog. Ordinarily, when a storage tank is exposed to fire, the most effective fire prevent ion in the exposed tank is cooling it with water.

2-4. CONTROL OF AIR. It is almost impossible to remove all air in the area of a fire. It is practical either to dilute the air, or to smother the fire, or both. In dilution, the amount of oxygen is reduced to the point where it will no 1 onger support combustion. In smothering, the fire is extinguished by excluding all air at the surface of combustion.

a. DILUTION. Dilution of air can be done with carbon dioxide or water fog (mist). Dilution of air is not sudden or long lasting; it must continue until the fire goes out. Carbon dioxide is a dry, noncorrosive gas that does not react with most substances; it does not conduct electricity and is not hazardous to personnel except in great concentrations. In addi t ion to dilution effects, water fog also affords protection to personnel by providing a nonconducting agent, by screening the heat, and by washing fumes and smoke from the air.

b. SMOTHERING. Foam, part icul arl y AFFF (Aqueous Film Forming Foam) , is the most effective blanket. ing agent for smothering a petroleum fire. A tight covering of foam that excludes all air is spread on the burning surface. The covering is easily applied to the top of a burning tank and can also be applied to a large floor surface. Since there is a tendency for foam to break down in fire, appl icat ion must be continued long enough

and fast enough to permit the burning surface to cool below the temperature where fire could start again. It is good practice to have a source of enough foam to extinguish a fire in the largest single area to be protected, rather than try to provide separate sources of foam for several simultaneous fires. Small fires can be smothered with sand, wet burlap, or a blanket.

2-5. CLASSES OF FIRES. Fires are grouped in four classes so that the right application of different kinds of fire extinguishers and fire extinguishing agents and met hods can be made. Extinguishing agents end methods that are suitable for one class of fires may not be suitable for others (see table 2-1). The four classes are as follows:

a. CLASS A. Class A fires are those in ordinary combustibles, such as wood, brush, grass, and rubbish. The cooling and quenching action of water is en effective extinguishing agent for class A fires.

b. CLASS B. Class B fires are those in flammable liquids, such as gasoline and other fuels, solvents, lubricants, paints, and similar substances that do not leave embers. A smothering or dilution effect is necessary to put out class B fires.

c. CLASS C. Class C fires are those that involve live electrical equipment, such as rotors, switches, and transformers. For class C fires, a smothering effect is preferred, but it is equally important that the extinguishing agent not be a conductor of electricity.

d. CLASS D. Class D fires are defined as those in comustible metals, such as titanium zirconiun, sodium, potassium, and magnesium, Smothering with dirt or sand is usually the best way to contain a class D fire until it bums out, although foams and fogs may reduce temperatures in the immediate vicinity to prevent spreading to other combustible es.

Table 2-1. Types of Fire Extinguishers

Type	Agent	Effect	Fire class	Expellant	Electric conductor	May freeze
Soda-acid.....	Water.....	Cooling, quenching....	A	CO_2 gas from chemical reaction..	Yes	Yes
Foam.....	Foam.....	Dilution, smothering..	A, B	Chemicals.....	Yes	Yes
Carbon dioxide.....	Gas and dry ice...	Dilution, smothering..	B, C	Self-contained pressure.....	No	No
Dry-chemical.....	Treated soda and.. other powders	Smothering.....	B, C	Gas or cartridge.....	No	No
Twin-agent Unit:						
Dry-chemical.....	Various powders...	Smothering.....	B, C	Nitrogen pressure bottle.....	No	No
Film-forming foam..	Foam.....	Dilution, smothering..	A, B	Nitrogen pressure bottle.....	Yes	Yes

SECTION II

FIRE EXTINGUISHERS

2-6. GENERAL. Paragraphs 2-7 through 2-11 describe the various types of hand or "first aid" fire extinguishers that may be available. Know how to use the types on hand and on what class of fire each is effective as well as on what classes of fires a particular extinguisher must not be used (see table 2-1).

2-7. SODA-ACID. The soda-acid extinguisher uses water forced out by gas pressure. Sodium bicarbonate (baking soda) is in water-solution form in the extinguisher, and sulfuric acid is contained in a loosely stoppered glass bottle. When the extinguisher is inverted, the acid escapes to react with the soda to produce carbon dioxide that builds up pressure and expels the water. The soda-acid extinguisher is used for class A fires only.

2-8. FOAM. The portable foam extinguisher is usually charged with a water solution of sodiun bicarbonate with a foam-stabilizing agent added. An aluminum sulfate solution is placed in a small separate container. When the unit is inverted, mixture of the two solutions produces carbon dioxide gas. Pressure builds up and expels the liquid in the form of tiny bubbles roughened by the stabilizing agent. A 2-1/2-gallon extinguisher produces 18 to 20 gallons of foam. This type of extinguisher is used for class A and class B forces.

2-9. CARBON DIOXIDE. The $C0_2$ (carbon dioxide) extinguisher comes in many sizes. The charge of liquid $C0_2$ under 800 to 900 psi pressure is released by a hand valve at the top of the unit. A tube runs from the top to the bottom of the unit so that only liquid $C0_2$ is released. This continues until about 80 percent has been used, and then gaseous $C0_2$ flows until the charge is exhausted. The charge flows in a high-speed stream, and a horn or flaring nozzle concentrates and directs the stream. The chilling effect of expansion in the horn converts about one third of the charge into dry ice or snow. Carbon dioxide is valuable for dilution of air in class B fires and is valuable for class C fires since it is a nonconductor.

2-10. DRY-CHEMICAL. The dry-chemical extinguisher is available in a wide range of sizes. The agent is one of several powders, such as soda, Purple K,

Super K, Monex, or ABC forced out by carbon dioxide, nitrogen, or compressed air. The action is smothering by the exclusion of air. The unit is valuable for both class B and class C fires.

2-11. WATER. Water alone is a last-resort method of controlling fuel fires. The stream of water hitting the fuel tends to spread the burning fuel over a larger area. Fuel floats on water and the floating burning fuel spreads rapidly through any gaps, holes, or cracks. Cooling a burning fuel surface can create a hotter fire by leaning out the fuel-air mixture. Water fog can be used to control and put out fuel fires by a combination of cooling, dilution, and smothering. Water alone is more valuable for use to control spreading of fires by cooling nearby tanks and equipment heated by the fire. This helps to prevent failure and keeps the contents from igniting.

CAUTION

Do not use water on or near electrical equipment unless it is absolutely certain that electric power has been shut off.

2-12. USE AND MAINTENANCE OF HAND EXTINGUISHERS. Effective use of hand extinguishers requires observance of certain general rules, as follows:

a. All personnel should know how to use which available extinguisher on what class of fire.

b. Monthly inspections should be made to ensure that extinguishers are in their designated places, are readily accessible, have not been damaged or tampered with, and that hose nozzles are not clogged.

c. All extinguishers must be recharged immediately after use.

d. All extinguishers must be examined by qualified personnel at least semi-annually to determine positively that they are in operating condition. The inspection date and initials or name of the inspector must be recorded on a tag and a tag must be attached to each extinguisher. (See local regulations.)

e. All pressure extinguishers must have a water pressure test made by higher echelons. (See local regulations.)

f. Instructions of the manufacturer must be followed exactly for charging, maintenance, and operation.

2-13. TWIN-AGENT FIRE EXTINGUISHER. The twin-agent fire extinguisher procured to protect bulk fuel systems is skid-mounted, with a tank of dry chemical and a tank of AFFF (Aqueous Film Forming Foam) . The basic unit has a reel of 150 feet of twinned hose ending in separate but close-coupled nozzles for each agent. The remote hose cart has an additional 150 feet of twinned hose. The dry chemical extinguishes fires by breaking up f 1 ame propagation and is compatible with mechanical foam. Water mixed with AFFF concentrate forms a foam which is used to form a smothering film over the extinguished area to prevent the fire from starting again. Detailed operating instructions are in chapter 2 of TM-07661A- 14.

CHAPTER 3

FUEL CONTANI NATION AND QUALITY CONTROL

SECTION I

INTRODUCTION

3-1. FUEL CONTAMINATION. Fuel contamination occurs when two or more grades or types of fuel are mixed by accident, or the fuel contains foreign matter such as dust, dirt, rust, water, or emulsions (described in section I I). Contaminated fuel can cause engines of all types to malfunction, which reduces operational readiness, and can result in deaths, as in the case of aircraft engine f ai l ure.

3-2. QUALITY CONTROL. Quality control is the term used to describe e the measures taken, tests made, and devices used to make sure that fuel is of an acceptable quality. Field tests for fuel quality are described in section I I I and aids to quality control are discussed in sections IV and V.

SECTION II

DEFINITIONS

3-3. CLEAN. Clean is the absence of visible solids, a cloud, a haze, an emulsion, or free water in the fuel .

3-4. BRIGHT. Bright is the sparkle of the clean, dry (free of water) fuel in the transmitted light.

3-5. CLOUD. Cloud means a cloudy or hazy appearance of the fuel due to fine particles in suspension indicating contamination. When clean and bright fuel cools, a light cloud sometimes forms, indicating that dissolved water has separated in cooling. Even this slight amount is undesirable, and the corrective action of section IV should be followed.

3-6. EXISTENT GUN. Existent gum is the contamination of fuel by a chemical reaction between the fuel and the hose lining, so that the dissolved lining gets into the fuel .

3-7. MICROBIOLOGICAL GROWTH. Microbiological growth consists of living organisms which grow at a fuel-water interface, such as when pockets of water exist in fuel tanks. These organisms include protozoa, fungi, and bacteria, with the fungus growths being the major cause of problems. The growths have a brown or gray color and a stringy, fibrous- 1 ike appearance. Fungus is a vegetable matter. It holds rust and water in suspension and it clings to glass and metal surfaces. I t can cause erroneous readings in fuel quantity systems, sluggish fuel control operat ion, and sticking of flow dividers. Presence of these growths in fuel is a reliable indicator that fuel filtration equipment is faulty, storage tanks have not been adequately stripped of water, and/or a need exists for more frequent cleaning of tanks.

3-8. SEDIMENT. Sediment is the general term applied to solid contaminants or foreign matter that can enter fuels from many sources, such as tanks, pipes, hoses, pumps, and people. The kinds of foreign matter usually found are bits of rust, paint, metal, rubber, lint, dust, and sand. Of these, rust is probably the most common. Part icl es that can cause damage may be so smal 1 that they can be seen only with the aid of a microscope and be measured by the micron scale. In the micron scale, 1 inch equals 25,400 microns, and 1 millimeter equals 1,000 microns. Figure 3-1 shows the relative sizes of 5- and 10-micron particles and human hair. Few people can see particles smaller than 10

Figure 3-1. Relative Sizes of 5- and 10-Micron Particles and Human Hair

microns with the naked eye. This is the dividing line between coarse and fine particles; coarse particles are larger than 10 microns in size, fine particles are smaller than 10 microns. Fine particles are visible only in accumulations that scatter or reflect sunlight, producing the effect of a cloud or haze in the fuel. The larger particles are removed by screen type strainers which protect filter-separators, pumps, and meters. The finest mesh in use is No. 400 (U.S. sieve number) with 400 meshes per linear inch, which passes 37-micron particles. Figure 3-2 shows the relative sizes of S-micron particles and openings in No. 200 and No. 400 screens. The finer particles are removed by micronic filters, designated by the smallest size of particle removed. A 5-micron filter removes particles S microns and larger in size. Sediment in delivered fuel indicates faulty filtering and its appearance and control are described in par. 3-9, following.

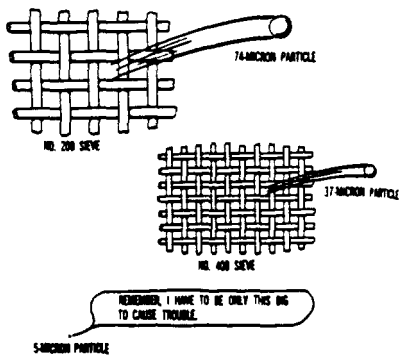

Figure 3-2. Relative Sizes of S-Micron Particles and Openings In No. 200 and No. 400 Wire Screens

SECTION III

FIELD TESTS OF FUEL QUALITY

3-9. THE APPEARANCE TEST. The fuel should be clean, bright, and free of visible particles water. or cloudiness The visual checks provide certain safeguards and warnings. The fuel color should agree with table 3-1. Cloudiness indicates water is present; visible foreign matter is sediment. Contaminants and their appearance and effects are listed in table 3-2.

Table 3-1. Color Code of Fuels

Grade (use)	NATO symbol	Color
80/87 (MOGAS)	F-12	Red
100/130 (AVGAS)	F-18	Green
115/145 (AVGAS)	F-22	Purple
JP-4 (Jet B)	F-40	Clear to straw
JP-5 (Jet A, A-1)	F-44	Clear to straw

a. To make the appearance test use a clean container to prevent contamination, and collect a fuel sample as far from the fuel source as possible, preferably from a dispensing nozzle spout. Swirl the fuel in the container to form a vortex (whirlpool) . Any sediment in the sample wil 1 accumulate on the bottom of the container directly under the vortex. The sediment limits in fuel of acceptable quality are shown in table 3-3.

b. Particles or sediment in the sample indicates improper filtering in the filter-separator or fuel monitor, or possibly contamination of the fuel between the fuel monitor unit and the dispensing nozzle. The faulty parts should be located and replaced.

c. Clouds in the sample are emulsified or finely divided water. Any sign of water in the sample indicates faulty water separation. Check the filter-separator unit for proper valve operation and the correct pressure drop across the inlet case. Inspect the fuel monitor assembly for proper operation. The water allowable in acceptable fuel is shown in table 3-4.

Table 3-2. Contamination Table

Type contaminants	Appearance	Characteristics	Effects on aircraft
Water:			
Dissolved water	Not visible.	Fresh water only. Precipitates out as cloud when fuel is cooled.	None, unless separated by cooling of fuel; then acts as free water.
Free water	Light or heavy cloud; droplets cling to sides of bottle, or large amounts on bottom.	Salt water or fresh water.	Icing of fuel system; erratic fuel gage readings; large amounts can cause flameouts; salt water corrodes components.
Sediment:			
Rust	Red or black powder, rouge, or grains; may appear as dye-like material in fuel.	Red rust (Fe_2O_3) nonmagnetic; black rust (Fe_3O_4) magnetic; rust generally comprises 70-90 percent of total sediment.	Causes sticking, sluggish or general malfunction of fuel controls, flow dividers, pumps, nozzles, etc.
Sand or dust	Crystalline, granular or glass-like.	Usually 0-20 percent of total sediment.	Same as rust.

Table 3-2. Contamination Table - Continued

Type contaminants	Appearance	Characteristics	Effects on aircraft
Sediment: - Continued			
Aluminum, cadmium, or magnesium.	White or gray powder or paste.	Sometimes sticky or gelatinous when wet, usually 0-10 percent of total sediment.	Same as rust, and may lower flight range and high attitude performance.
Emulsions:			
Water in fuel	Light or heavy cloud.	Finely divided drops of water in fuel; same as free water cloud; will settle to bottom in minutes, hours, or weeks, depending upon nature of emulsion.	Same as free water.
Fuel in water	Reddish, grayish, or blackish; sticky material described as gelatinous, gummy, or "mayonnaiselike"; may appear as "globules" or stringy, fibrous material in clear or cloudy fuel.	Finely divided drops of fuel in water; contain rust which stabilizes or "firms" the emulsion; sticks to most materials normally in contact with fuels; may stand from days to months without separating; contains 50-70 percent water and 30-50 percent fuel.	Same as free water and sediment, but worse; causes filter plugging and erratic readings in fuel quantity probes.

Table 3-2. Contamination Table - Continued

Type contaminants	Appearance	Characteristics	Effects on aircraft
Miscellaneous: Interface matter	Lacy bubbles or scum at interface between fuel and water; resembles jellyfish.	Caused by bacteria acting on chemicals in fresh water; may have "rotten egg" smell.	Same as free water; may leave deposits in fuel tanks.
Air bubbles	Cloud in fuel.	Disperse upward within a few seconds.	None.

Table 3-3. Sediment Contamination Limits

Sediment (mg/liter)	Fuel quality	Fuel system reliability	Acceptability
0.0 - 1.0	Clean	Excellent	Yes
1.0 - 2.0	Slight contamination	Good	Yes
2.0 - 5.0	Moderate contamination	Fair	Marginal
5.0 - 10.0	Heavy contamination	Poor	No
10.0 - plus	Gross contamination	None	No

Table 3-4. Water Contamination Limits

Form of water	Amount of water (ml/liter)	Acceptability
None	0.00	Yes
Detectable visually	0.00 - 0.005	Yes
Trace	0.005 - 0.02	No
Light to heavy cloud	0.02 - 0.03	No
Heavy cloud	0.3 plus	No
Settled water	0.05 plus	No

d. Any evidence of microbiological growth (paragraph 3-7) requires stopping fueling operations and notifying the fuel control officer.

3-10. THE GRAVITY TEST. The specific gravity of a fluid is the weight of a given volume of the fluid compared to the weight of an equal volume of water at the same temperature. Water is assigned a specific gravity of 1.00, so a liquid lighter than water will have a specific gravity less than 1.00, and a liquid heavier than water wil 1 have a specific gravity of more than 1.00. As liquids are heated, they expand so that the same weight of liquid takes up more volume, and the specific gravity goes down. This change of specific gravity with temperature for various fuels is shown in figure 3-3. Since meaningful differences in fuel

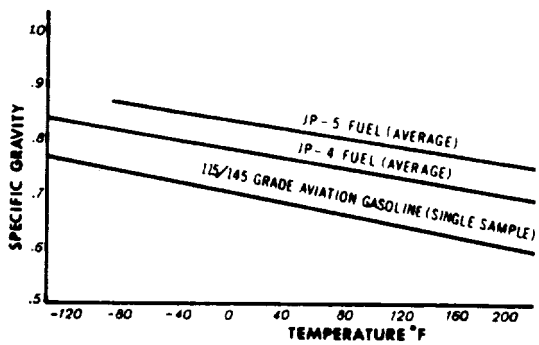

Figure 3-3. Variation of Specific Gravity With Temperature

specific gravities may extend out to four decimal places (table 3-5), the API (American Petroleun Institute) developed a scale called degrees API gravity, which is easier to use with fuels. The relationship is expressed as follows:

$$\text{Degrees API} = \frac{141.5}{\text{Specific Gravity}} - 131.5$$

or

$$\text{Specific Gravity} = \frac{141.5}{131.5 + \text{degrees API}}$$

It can be seen that a fuel of 10° API gravity has a specific gravity of 1.00, or is the same as water.

To make the gravity test:

a. Collect a fuel sample from a nozzle spout into a clean tall container so that there is enough fluid to float the hydrometer (about 150 milliliters or 1/3 pint) .

b. Place a hydrometer with the proper seal e for the fuel being tested (table 3-5) into the hydrometer cyl inder, and pour the fuel sample in until the hydrometer floats clear of the cylinder bottom. Record the degree API reading on the hydrometer scale. Record the temperature of the fuel.

c. The degree API reading should be compared with the reading recorded when that particular batch of fuel was last transferred. If this cannot be done, compare the sample reading with the degree API readings of samples that have been collected at regular intervals from the same fuel batch. This will insure detection of any change in specific gravity during storage or during dispensing operations.

d. Fuel received from tanks which handle several fuel types should be very carefully checked with a hydrometer. Fuel received from depot- or refinery-sealed containers, such as drums or tank cars, is less likely to have been mixed with other fuel types, but should be hydrometer-checked as a matter of course.

e. The degrees API generally should not differ from the range shown in table 3-5 by more than 0.5° If the 0.50 API is exceeded, check the sample with another hydrometer. If the limit is still exceeded, the fuel should not be used until

Table 3-5. Specific and API Gravity Ranges for Fuels
(Corrected to 60° F)

Grade	Specific gravity range*	API gravity range	Pounds per U.S. gallons**
80/87	0.72 - 0.695	65 - 72	5.961
100/130	0.727 - 0.689	63 - 74	5.928
115/145	0.716 - 0.685	66 - 75	5.837
JP-4	0.8017 - 0.7507	45 - 57	6.618
JP-5	0.8448 - 0.7883	36 - 48	6.830

*Estimated range.

**Based on average API gravity and to be used for estimating only.

adequate technical advice and/or laboratory analysis has been obtained.

3-11. TESTING INTERVALS . The appearance and gravity tests should be performed at the following intervals:

a. Daily, prior to starting fuel dispensing.

b. Before dispensing fuel from or through a new dispensing system component.

c. When a new fuel grade is being handled.

d. When any doubt of fuel quality exists.

e. After recirculation of fuel .

SECTION IV

AIDS TO QUALITY CONTROL

3-12. SETTLING TIME. After fresh stocks have been added, the maximum possible settling time should be allowed to allow water and sol ids to settle out. The following minimum times are recommended:

a. Three hours per foot of fuel depth for JP-5-type fuels.

b. One hour per foot of fuel depth for JP-4-type fuels and aviation gasolines.

3-13. RECIRCULATION.

a. Recirculation is the process of transferring fuel from one part of a dispensing system, through every other part, into an empty or partially filled tank. Recirculation is used to remove as much water as possible from fuel . It also helps control existent gum and microbiological growth. Contamination possibility increases with idle time, but with tactical systems, periods of nonuse will seldom exceed 48 hours, so generally, pumping an amount of fuel equal to twice the amount in the installed hose will remove contaminants to an acceptable level. If a meter is installed, pump until twice the number of gallons in the hoses has been recirculated. With no meter installed, the timed procedure of paragraph 3-13b can be used.

b. A time for recirculation pumping can be determined as follows:

(1) Count and record the number of sections of installed hose of each size and length.

(2) Use table 3-6 to find the total hose content in gallons. For example, if there are 15 sections of 6" x 50′ hose, 21 sections of 4" x 50′ hose, 12 sections of 2" x 50′ hose, and 6 sections of 2″ x 25′ hose installed, the calculations, using table 3-6, are:

10 sections 6" x 50′ - 730 gallons
5 sections 6" x 50′ - 365 gallons
20 sections 4" x 50′ - 660 gallons
1 section 4" x 50′ - 33 gallons
10 sections 2" x 50′ - 90 gallons
2 sections 2" x 50' - 18 gallons
6 sections 2" x 25′ - 27 gallons
Total - 1,923 gallons

Table 3-6. Fuel Content of Hose*

Sections	6" x 50'	4" x 50'	2" x 50'	2" x 25'
1	73	33	9	4.5
2	146	66	18	9
3	219	99	27	13.5
4	292	132	36	18
5	365	165	45	22.5
6	438	198	54	27.0
7	511	231	63	31.5
8	584	264	72	36.0
9	657	297	81	40.5
10	730	330	90	45

*To nearest whole gallon

(3) The amount of fuel to be recirculated is twice the hose content, or 2 x 1,923 = 3,846 gallons.

(4) Divide the gallons to be pumped by the pumping rate in gallons per minute to find the pumping time in minutes. For the example above, if the pump is set for a delivery rate of 150 gallons per minute:

3,846 gallons + 150 gallons per minute = 25.6 minutes.

Rounding to the nearest minute, operate the pump for 26 minutes.

c. Acceptable recirculation procedures include any method of equipment connection that allows pumping fuel in a closed loop through every installed component (except gravity nozzles). The process and requirement applies to the TAFDS, AAFS, and refueler vehicles.

d. Recirculation is done at the times and on occasions set out in local regulations, but should always be done before beginning daily operations and before dispensing fuel when the equipment has not been used for defined periods in excess of 48 hours.

e. After recirculation, reconnect the system for dispensing, and take a fuel sample from a nozzle to make sure it passes the quality tests (section III of this chapter).

SECTION V

CHANGING FUEL TYPES

3-14. FLUSHING THE SYSTEM. When the type of fuel in a dispensing system is to be changed, flushing with the new type fuel may be required. Table 3-7 provides a guide to flushing procedures. Flushing requires pumping the flushing agent through the assembled system. Water should not be used to flush the system except as a last resort. If water is used, extreme care must be taken to make sure the entire system is dry before using it for fuel. If water is used as a flushing agent, recirculation must be used and quality control checks carefully done. The appearance and gravity fuel quality tests (section III of this chapter) must be done on each new fuel type before dispensing. If there is any doubt about fuel quality, notify the fuel control officer and obtain expert advice.

CAUTION

Before flushing the system with water, disconnect filter-separator and fuel monitor assemblies.

Table 3-7. Cleaning Required Prior to Changing Fuel Types

TO		AVGAS	JP-4	JP-5
FROM	AVGAS	A	D	D
	JP-4	C	A	A
	JP-5	C	B	A

A - None

B - Drain and fill

C - Drain and flush with new product

D - Drain, remove sludge, flush with new product

CHAPTER 4

BULK FUEL DELIVERY TO SMALLER CONTAINERS

SECTION I

FUEL CONTAINERS

4-1. FIVE-GALLON MILITARY GASOLINE CAN.

a. The 5-gallon can (figure 4-1) is made of 20-gage sheet steel, with the welded body clinched to the bottom chime by a double seam. The head is welded to the body. The body is fitted with three handles and a 2-inch threaded flange with a closure (plug) assembly. A vent tube, welded to the underside of the head, is connected to a small vent hole in the flange to ensure free flow when the can is being emptied. The closure assembly consists of a threaded plug with a gasket, which screws into the flange and is secured to the can by a swivel wire, swivel wire hasp, connector link, cotter pin, and washer. A flexible spout (inset, figure 4-1) can be installed in place of the plug to make fuel transfer easier. A cap and screen assembly screws onto the end of the spout to screen out sediment.

b. Before filling, check cans for serviceability as follows :

(1) Check paint condition, especially inside the can. Cans with loose or peeling interior paint should not be used.

(2) Check each can for dents and holes. Do not use a can with holes or if a dent has caused the metal to rupture. Pay particular attention to dents along the chime and welded seams.

(3) Check the inside of the can for general cleanliness and lack of contaminants. Cans with removable contaminants should be cleaned thoroughly. A residue of asphalt, tar, or similar substance makes the can unfit for use.

(4) Check inside and outside the can for rust. Excessive rust makes the can unfit for use.

(s) Check the flange to make sure it is securely seated in the head and that the flange threads are in good condition.

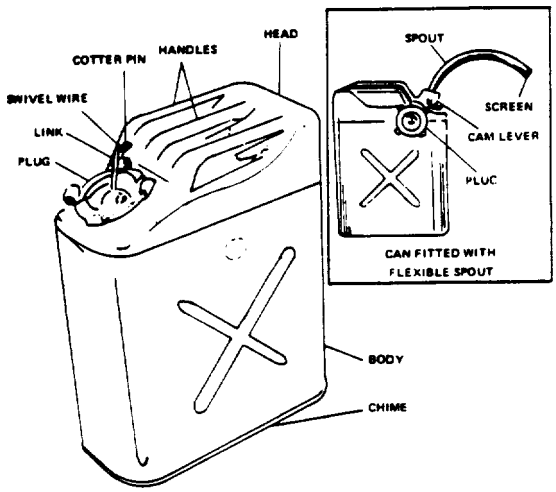

Figure 4-1. Five-Gallon Gasoline Can

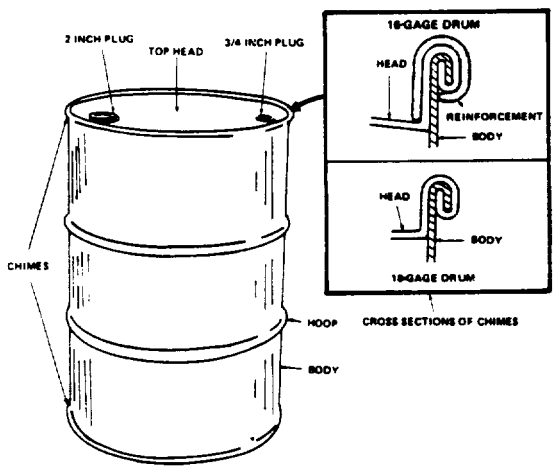

Figure 4-2. Fifty-Five-Gallon Drum

Do not use cans with crossed, stripped, rusted, or worn threads.

(6) The filter plug, gasket, and swivel wire should be installed and be in good condition.

(7) Check the vent tube. Clogged tubes should be cleaned; cans with broken or missing vent tubes may be used only in an emergency.

(8) Check the handles. Cans with holes, dents, or rips in the handles are serviceable if they can be carried safely without injuring the hands.

4-2. FIFTY-FIVE-GALLON DRUM.

a. The 55-gallon drum (figure 4-2) is made of either 16- or 18-gage steel and is provided with rolling hoops. The drum heads are secured to the body by double-seamed chimes. Chimes on the 16-gage drums are reinforced by a strip of sheet steel (inset, figure 4-2). Two flanged closures, a 2-inch plug and a 3/4-inch plug (vent) , are mounted in the top head of each drum. The 16-gage drum is more durable than the 18-gage drum and can be reused; the 18-gage drum is usually a one-time shipping container.

b. Each closure assembly consists of a threaded flange pressed into the head of the drum, a male threaded plug, and a gasket. Both closures on any one drum will be of the same type, either Rieke or Trisure (figure 4-3). Although it is possible to screw a Rieke plug into a Trisure flange, or vice versa, it always results in leakage. The two types of closure are different in design, and the parts are not interchangeable. The proper plug and gasket must be used with the matching flange.

c. Check drums for the following defects, any one of which make a drum unserviceable:

(1) Excessive rust, inside or outside.

(2) Extensive damage to shape.

(3) Damage to either flange.

(4) Holes.

(5) Residue of asphalt, tar, or similar substance that cannot be removed.

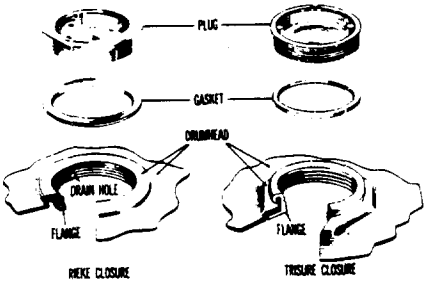

Figure 4-3. Closures of 55-Gallon Drum

4-3. CLEANING CONTAINERS. Cans and drums can be cleaned by sloshing solvent about in them and al lowing them to drain and dry thoroughly.

4-4. CONTAINER DATA. Table 4-1 has information on petroleum product containers likely to be used.

SECTION II

FILLING AND EMPTYING CONTAINERS

4-5. PRECAUTIONS. The following general precautions should be observed in filling fuel containers:

a. Filling operations must take place in a well-ventilated area, and bonding and grounding equipment or facilities must be available.

b. Receiving containers must be inspected for cleanliness of interior, gasket condition, and condition and fit of plugs. (See section 1.)

c. Water cans must not be used as fuel containers.

d. The fuel to be dispensed should be tested for quality before the start of filling operations.

e. All fuel containers, whether empty or full, should be closed tightly when not in use.

Table 4-1. Data on Standard Fuel Containers

Container	Empty wt (lb)	Average wt when filled (lb)			Dimensions (in)				Containers* per ton		Number of full containers that can be carried on a 2-1/2-ton truck
		Gasoline, automotive combat**	Kerosene	Diesel fuel	Length	Width or diameter	Height	Cubic feet for storage purposes	Long ton	Measurement ton	
Drum, 55-gallon, 16-gage**	70	411	443	457	----	23-7/16	35	12	5.93	3.33	14
Drum, 55-gallon, 18-gage**	50	391	423	437	----	23-7/16	35	12	----	----	14
Can, 5-gallon gasoline	10.5	41	----	----	13 3/4	6-3/4	18 1/2	1	53.5	40	120
Drum, 5-gallon cylindrical	11	----	45.2	46.2	----	11-1/2	13 9/16	1	40.7	40	101

*Data for 55-gallon drums and 5-gallon gasoline cans are based on average weight of automotive combat gasoline.

**The standard 55-gallon drum has an authorized capacity of 54 gallons for products with flash point of less than 80° F and a 55-gallon capacity for products with flash point of less than 80° F.

f. Containers should be handled carefully to avoid damage that could cause leaks. Avoid excessive shaking of containers.

g. Fire extinguishers and loose sand or dirt should be readily available during filling operations.

h. Avoid producing sparks when using tools.

i. Never fill containers on a truck unless the truck is grounded.

j. During filling, the hose nozzle must be in contact with the metal opening of the container to ground static electricity. The nozzle or loading spout should be inserted well within the container opening so that no liquid or spray will fall outside, and the nozzle should remain in contact with the container opening until the nozzle valve is shut off.

k. The filling operation should be watched closely to prevent overfill and to stop the operation in case of emergency. If spills happen, cover the spill area immediately with loose dirt or sand.

l. Fill containers to the proper level. (See paragraph 4-6.)

m. The no smoking rule must be strictly enforced.

4-6. FILL LEVELS. Temperature variations cause volume changes in fuels and affect fuel vapor formation and condensation of moisture in the containers. A vapor space of about 5 percent (1/20th) of the container volume must be left unfilled. If too much space is left, a drop in temperature will cause moisture to condense from the air in the container; an increase in temperature may cause the space to be filled with an explosive fuel-vapor mixture. Too small a vapor space may cause the container to split if the temperature rises. Be sure the container is on a level surface when the fi ll level is being determined.

a. FIVE-GALLON CANS. Five-gallon cans should be fil led to the level shown in figure 4-4. As a practical matter, they may be filled to any level between 1/4 inch and 3/4 inch below the lowest point on the closure threads (or 1/2 inch above or even with the top of the inside weld, respectively). Filled to the maximum level, the can holds 5.14

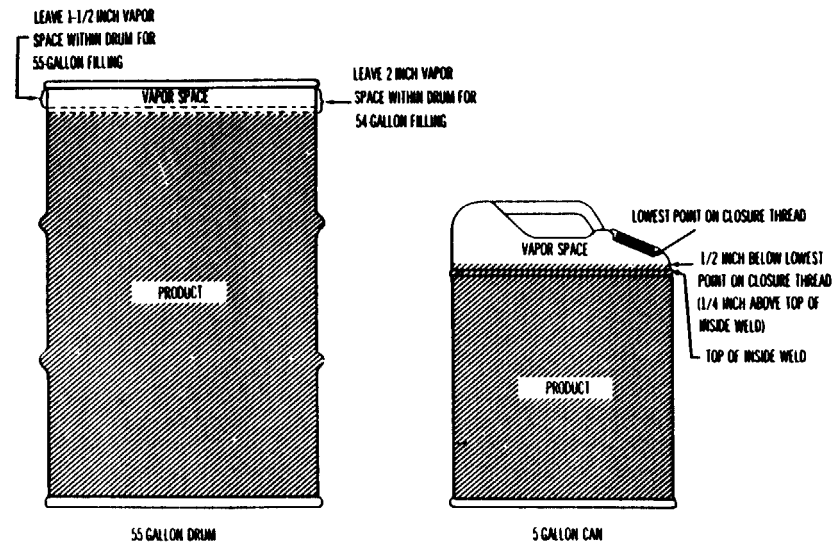

Figure 4-4. Fill Levels for 5-Gallon Cans and 55-Gallon Drums

gallons; at the minimum level, 4.97 gallons. The average contents of a filled can is 5.05 gallons.

b. FIFTY-FIVE GALLON DRUMS. Although the standard drum has a maximum capacity of 57.75 gallons, adequate vapor space must be provided as shown in figure 4-4. The drum should be loaded with 54 gallons of light fuels, such as gasolines and JP-4; or with 55 gallons of heavier products, such as diesel fuels, solvents, kerosene, and lubricating oils. Use metering devices if available, or the levels indicated in figure 4-4.

4-7. FILLING PROCEDURES. Transfer of fuels from bulk containers to drums and cans is by means of various pumps and nozzles available in the bulk fuel systems and on refueler trucks. Improvised methods can be used when required. Observe the general precautions (paragraph 4-5) in all fuel transfer operations.

4-8. EMPTYING CANS AND DRUMS. Containers should be placed on a level surface and openings wiped clean and dry before plugs are removed. A universal bung wrench or other suitable tool should be used to unscrew plugs. The plug should be loosened enough to allow vapor to escape gradually before removing. If the temperature of the fuel has risen since filling or if the liquid is agitated, opening the plug rapidly may cause blowby. Blowby is a sudden release of air-vapor mixture from a confined space, often followed by a spill-over of the liquid. Enough containers should be sampled and tested to make sure that the lot or batch of the fuel is of the proper grade and quality. Before containers are stored or returned to the filling area, they should be completely emptied by pumping or pouring, and the plugs installed wrench-tight.

a. EMPTYING 5-GALLON CANS.

(1) Use the flexible nozzle spout (inset, figure 4-1) if available. Remove plug from the can, and insert and lock the spout into the flange. If the cap and screen assembly is available, screw it into the end of the spout; inspect for cleanlinesss and condition before pouring. To prevent sparks, touch nozzle spout to the metal opening of the receiving container and maintain this bond until the receiver is full, or the can is empty, as the case may be.

(2) When the spout is not available or is too large for the receiver opening, pour the fuel through a metal funnel. Make sure the funnel touches the receiving container and the spout or can during pouring to prevent sparks, and take care to avoid overflows.

(3) When neither spout nor funnel is available, pour the fuel into an intermediate container bet ter suited to receive and dispense it, or use a bulb siphon. A tube siphon can be used if the tube is filled with fuel before the two ends are inserted.

WARNING

Never suck fuel into the siphon tube with the mouth.

(4) The AAFS and TAFDS suction stub assembles and drum unloading manifolds may be used to unload cans.

b. EMPTYING 55-GALLON DRUMS.

(1) Hand pumps can be used to empty drums into cans or fuel tanks.

(2) Power driven pumps can be used with the suction stub assemblies and the drum unloading manifolds in the AAFS and TAFDS.

(3) If only small quantities of fuel are needed at a time, a drum faucet can be installed in the 3/4-inch vent flange, and the drum placed on its side on an elevated structure. Use a drip pan under the faucet to contain spills.

CHAPTER 5

TAFDS (TACTICAL AIRFIELD DISPENSING SYSTEM) OPERATIONS

SECTION I

TAFDS COMPONENTS

5-1. GENERAL. The TAFDS is a fairly simple, versatile, air transportable aviation fuel dispensing system capable of receiving and storing up to 120,000 gallons of fuel and simultaneously dispensing fuel from 18 refueling stations. A schematic diagrem of the TAFDS is shown in figure 5-1. The following paragraphs of this section will briefly describe TAFDS components and give their functions and characteristics. More detail ed information will be found in chapter 1 of the latest edition of NAVAIR 19-1-90.

5-2. TANK CHEST. The tank chests for the 10,000-gallon and 20,000-gallon collapsible tanks are similar in size and appearance. They are quipped with carrying handles, lifting hooks, and towing eyes. One end of the chest is partitioned to house the inlet and outlet fittings, the vent assembly, and tank repair kit.

5-3. TANKS. The older 10,000-gallon tanks (black 10' x 40.5' and tan 22′ x 22′) are being replaced by 20,000-gallon tanks. This chapter will discuss only the 10,000-gallon size since it is still in use in some TAFDS sets. If the TAPDS set being used has 20,000-gallon tanks, refer to sections I, II, and III of chapter 6. Characteristics of the tank, hose, and tank accessories are shown in table 5-1.

5-4. HOSE ASSEMBLIES AND ASSOCIATED EQUIPMENT.

a. HOSE ASSEMBLIES. The suction and discharge hoses in the TAFDS (see table 5-1) have metallic wires in their construction to give positive electrical bonding between end fittings. The suction hose has a reinforcing wire to make it stiff enough to withstand a high vacuum. The discharge hose does not have the wire and will collapse under suction, but is designed to operate at pressures up to 125 psi (pounds per square inch) . A shank adapter is in one end of each hose section and a shank coupler is in the other end. All couplings in the system are of the quick-disconnect/disconnect type. The adapter is inserted into the coupling, end the handles are loitered as far as they will go, causing a cam

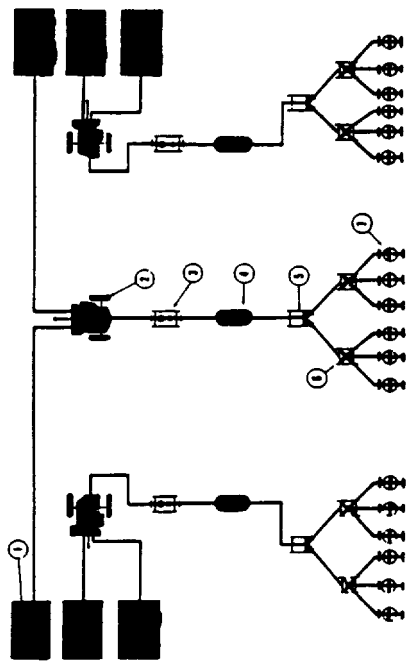

1. Tank
2. Pump
3. Filter-Separator
4. Fuel Monitor
5. Meter
6. Dispensing Manifold
7. Dispensing Nozzle

Figure 5-1. Schematic of TAFDS

Table 5-1. 10,000-Gallon Tank, Hose, and Tank Accessories Data

Item	Width or diameter	Length	Height	Weight (pounds)	Working pressure (psi)	Capacity (gallons)
Tank, fabric						
black	10.0'	40.5'	4.0'	800		10,000
tan	22.0	22.0'	4.0'	400		10,000
Hose:						
discharge	2.0"	25.0'		28.0	100	4 .5
	2.0"	50.0'		55	100	9 .0
	4.0"	50.0'		113.5	125	3 3.0
suction	2.0"	25.0'		42		4.5
	4.0"	25.0'		95		16.5
Ground cloth						
black	12.0"	42.0'		25		
tan	22'	22'		60		
Chest, tank	31.0"	167.0"	26.0"	325.0		

action, forcing the adapter against a gasket in the coupl er to make a leakproof seal.

b. FUEL DISPENSING NOZZLES. Gravity (over-wing) o. l pressure-fueling (single-point or under-wing) nozzles are used with the TAFDS. When using either type nozzle, make sure the receiving tank pressure and flow-rate limits are higher than the nozzle output.

(1) The gravity nozzle dispenses fuel when the lever is pulled and there is pressure being provided by the TAFDS pump. The ground cable must be bonded to the vehicle receiving fuel by the clip or plug before fuel is dispensed.

(2) The pressure fuel nozzle operation is mechanical, through manual control. A valve seals the nozzle outlet to prevent leakage when the nozzle is not mated to an adapter. The control for this valve is locked against operation until the nozzle is coupled to an adapter. The coupling action compresses the nozzle nose seals against the adapter bayonet flange to make a leakproof connection. Coupling also unlocks the valve flow-contro l handle so that further rotation of the handle lifts the valve to open a passage for fuel flow.

c. SUCTION STUB ASSEMBLY. The suction stub assembly has a 2-inch tube to unload fuel from drums or cans.

d. GATE VALVES. The gate valves have flanges for connect ing to adapters, couplers, or other flanged connections. They are used throughout the system on various components and in major hose connections to control fuel flow.

e. WYE COUPLINGS. Wye couplings are used to branch suction or discharge hose lines. The female wye has two couplers and one adapter; the male wye has two adapters and one coupler.

f. DRUM-UNLOADING MANIFOLD. The drum-unloading manifold has three 2-inch couplers on a 4-inch adapter and is used to transfer fuel from drums or cans to a storage tank.

g. SKID-MOUNTED MANIFOLD ASSEMBLY. The skid-mounted manifold assembly has five gate valves; two have couplers, and three have adapters. The manifold assembly is the means of receiving fuel and routing it to and within tank farms.

h. FUEL DISPENSING MANIFOLD. The fuel dispensing manifold has three 2-inch adapters on a 4-inch coupler. and is installed between the meter and the dispensing nozzle. Sections of 2-inch discharge hose connect the manifold to dispensing nozzles.

5-5. PUMP, 350 GPM. The pump unit is a trailer-mounted, self-priming. centrifugal pump driven by a four-cylinder, air-cooled gasoline engine. The unit is designed for pumping gasolines. jet fuels, diesel fuels, and water at a rate of 350 gpm (gallons per minute) at about 80 psi discharge pressure. It produces a tdh (total dynamic head) of 275 feet. The larger 600 gpm three-cylinder diesel pump described in paragraph 6-15 is also used in the TAFDS.

5-6. FILTER-SEPARATOR. The filter-separator is a self-contained skid-mounted unit designed to remove solid matter and undissolved water from fuels. A sump on the bottom of the tank collects water separated from the fuel. A float, designed to float on water and sink in fuel, controls the fuel discharge valve and the water drain valve When the water nears the maximum safe level, the water drain valve opens to discharge the water. If large amounts of water enter the unit and the level goes over the safe limit, the fuel discharge valve closes until the water drain valve is able to discharge the excess. A selector control and a pressure gage are provided to obtain inlet and outlet pressure readings to determine the pressure drop across the filter-separator.

5-7. FUEL MONITOR. The fuel monitor, also referred to as a go/no-go gage, is mounted on a skid frame, and is installed between the filter-separator and the meter. The monitor contains 20 filter elements (fuses) to ensure fuel quality by removing solid contaminants and undissolved water. Accumulation of contaminants and water will increase resistance to fuel flow until the flow is shut off. A pressure gage and selector valve permit q easuring either the inlet or the outlet pressure.

5-8. METER. The meter assembly is a self-contained skid-mounted unit with one inlet and two outlet quick-disconnect couplings with gate valves at each coupling. The unit is capable of metering flow rates between 20 and 30 gpm at a maximum flow pressure of 150 psi. A register on top of the meter records the fuel dispensed during each individual operation as well as keeping a cumulative total of all fuel dispensed.

SECTION II

PREPARATION FOR USE

5-9. GENERAL. The criteria in this section for site selection, construction work requirements, system layout, and assembly are included only as a guide, and relate to the TAFDS using the 10,000-gallon tanks. If 20,000-gallon tanks are used, refer to chapter 6. Choice of site is made only after careful study of all available information, and the tactical requirements balanced with safety considerations. A TAFDS site should take advantage of natural cover. The most level and easily accessible fuel routes should be chosen. Fuel lines should be located near and parallel to an existing or planned road or trail, when possible, for easier transportation, assembly, inspection, and maintenance of the hose line equipment. Location of the system should minimize construction requirements and maintenance difficulties.

5-10. SITE SELECTION AND PREPARATION.

a. BASIC CONSIDERATIONS. The TAFDS site must have enough real estate (area on the ground) to spread out its components so that they can operate efficiently and safely. The greatest safety hazard is from fire, whether it results from accident or enemy action, therefore fire safety is given high priority in site selection and preparation. Whenever possible:

(1) The fuel tanks will be laid out so that the long axis of the six-tank farm is perpendicular to the prevailing wind. For instance, if the arrangement has two rows of three tanks each, the prevailing wind should blow toward the three-wide side, so that in case of fire only one tank will be directly downwind from the fire. Figure 6-1 illustrates this form of tank farm arrangement.

(2) Each tank should have its own berm, a protective earthwork dike built around the tank perimeter. Berm construction is discussed in paragraph 5-10b.

(3) For fire safety, allow at least 150 feet between the tank outlets and the fuel dispensing points.

(4) The difference in elevation between the tanks, pump units, and dispensing points should be as small as possible.

The pump is more effective if it does not have to lift fuel in suct ion or pump uphill in discharge.

(5) All tanks should be at nearly the same level, since lower tanks will tend to overfill and be overstressed, leading to shorter tank life and possible rupture.

(6) Hose length between a pump and a dispensing point should not be more than 1,000 feet so that friction losses will not reduce the flow rate unreasonably.

(7) The terrain must be suitable for movement of wheeled and skid-mounted TAFDS equipment. as well as providing paths to firefighting equipment.

b. BERM CONSTRUCTION.

(1) The berm should be made large enough to hold one and one-half times the content of a filled tank; that is, 15,000 gallons for the 10,000-gallon tank, and 30,000 gallons for the 20,000-gallon tank.

(2) The berm base area should be made as small as possible, so if a tank ruptures the burning surface is the least possible. This means making the berm base, or tank bed, very near the size of the filled tank (table 5-1).

(3) The berm lip, or rim, should be at least as high as the filled tank to contain surges in case of tank rupture and to shelter the tank from heat, rifle fire, or nearby explosions (mortars, rockets, etc.).

(4) Berms should be compacted by tracked vehicles during construction, and the outer wail gently sloped to allow easy access by firefighters.

(5) After a tank is filled, support the sides part way up with loose earth or sand fill. This reduces fabric stress and fuel motion in case of rupture.

(6) Berm construction using these principles is shown in figure 6-2. The dimensions shown are for the 20,000-gallon tank, but can be adjusted for the 10,000-gallon size. The berm spacing and dimensions

shown will ensure that any one tank fire will not ignite another fuel tank and are based on maximizing fire safety with minimum ground use. The primary consideration is to build the berms as close as possible to the tank. Then a tank fire will have the smallest possible burning area, the smallest possible fire, and the least amount of heat radiated. There will also be the smallest possible safe spacing to adj scent tanks, the shortest length of fire extinguisher hose to reach all tanks, and the greatest probability of extinguishing a large fire. Field or operational demands for rapid installation, drainage, or tank repair may force some enlargement of berm area and spacing and give less than optimum safety.

c. FIREFIGHTING EQUIPMENT.

(1) The twin-agent unit (Extinguisher, Fire, Dry Chemical, and Aqueous Film Forming Foam, Self-Contained, Model D4.5LTW100N. MC) has been procured for use in bulk fuel farms, and should be placed as indicated in the tank farm arrangement, figure 6-1.

(2) All available hand fire extinguishers should be readily accessible.

(3) Protective clothing should be quickly accessible.

5-11. INSTALLATION. The general layout of the TAFDS (figures 5-1, 6-1, and 6-2) is subject to many variations, some of which are described in paragraph 5-12. The following procedures are for guidance only; specific installations may require deviation.

a. Select and prepare site, using paragraph 5-10 for guidance.

b. Move all components to site; conduct an inventory to ensure there is a complete system available.

c. Uncrate and check each component for apparent readiness, and locate each about where it will be used.

d. Measure distances between components to make sure enough hose is available. Avoid S-turns and

kinks in the hose, since straight-line pumping gives the best flow rate by reducing friction loss. Avoid using excessive hose lengths.

e. Connect all components. Verify that proper flow direction exists at all connections, and that suction hose is used between the tank outlet and the pump.

f. Install nozzle stands. Locate firefighting equipment as shown in figure 6-1, including hand units and protective clothing. Post NO SMOKING signs or other warning signs around the site.

5-12. ASSEMBLY. Assembly of the TAFDS in one of the configurations described below will provide for most normal operations.

a. ASSEMBLY FOR DISPENSING AS A 60,000-GALLON SYSTEM.

(1) Connect a 4-inch diameter suction hose section from each tank outlet (female fitting on the tank) to a 4-inch valve. (Valve may be omitted if desired.)

(2) Connect the 4- inch valve to the pump inlet (female fitting) using a 4-inch diameter suction hose.

(3) Using 4-inch diameter discharge hose sections, connect the pump outlet to the filter-separator inlet (female).

(4) Connect the filter-separator to the fuel monitor inlet (female) with a 4-inch diameter discharge hose.

(5) Connect the fuel monitor to the inlet (female) of the meter.

(6) Connect the meter to a manifold dispensing assembly inlet (4-inch female fitting). Connect 2-inch diameter discharge hoses to the three 2-inch male outlets of the dispensing assembly,

(7) Connect the desired nozzles to the male fittings on the discharge hoses.

b. ASSEMBLY FOR DISPENSING FROM LESS THAN A COMPLETE TAFDS. It is possible to dispense from less than a complete six-tank TAFDS in various

layouts. For assembling less than a complete TAFDS:

(1) Use one pump unit for not more than three tanks.

(2) Use one filter-separator and one fuel monitor (in that order) between each pump unit outlet and meter assembly.

c. ASSEMBLY FOR FUEL STORAGE

(1) Use one pump unit for each three-tank group. Connect each three-tank group. Connect each tank outlet to a pump inlet.

(2) Connect a pump outlet to each tank inlet, using 4-inch discharge hose and wye couplings, to allow recirculation of fuel from the tank through the pump and back to the tank to control existent gum formation. (See paragraph 3-13.)

(3) A filter-separator and fuel monitor are placed in each discharge line between the pump outlet and tank inlet to remove solid contaminants and water.

(4) Selective pumping to or from any tank is provided by valves on the pump inlets and outlets.

d. ASSEMBLY FOR FUEL TRANSFER.

(1) Connect each tank outlet to a pump inlet. (This will require two pump units if more than three tanks are used.)

(2) Connect outlets of one pump unit to the manifold assembly inlets for further selective transfer, or connect the pump outlets directly to the next fuel receiving station if it is close enough.

(3) Transfer should be made through filter-separators and fuel monitors, although reduced flow rates may result.

(4) Other transfer layouts can be assembled from various combinations of the essential elements: discharge and suction hose assemblies, pumps, filter-separators, fuel monitors, and tanks.

(5) In either storage or transfer hookups, use straight-line flow. This uses the least hose, gets the best flow rate, end lessens possibility of contamination.

SECTION III

OPERATING INSTRUCTIONS

5-13. TANK AND ASSOCIATED EQUIPMENT.

a. TANK SERVICEABILITY STANDARDS. Tanks must be inspected and air-soapbubble tested before use. Inspect thereafter in accordance with current instructions.

(1) Categories of defects are:

(a) Minor - does not materially reduce tank usability; requires no repair.

(b) Major - materially reduces useability of the tank; is reparable in the field.

(c) Critical - will result in hazardous or unsafe conditions for operators; is beyond field repair.

(d) Unlisted - adversely affects strength or usability of the tank and shall be *classed as* critical defects.

(2) Defects are:

(a) Blister - a raised circular area of nonadhesion in a seam, panel, or fitting, showing evidence of trapped gas or liquid.

(b) Exposed cloth - area in which cord or cords are exposed and have no coating of synthetic rubber. Scuffed areas with visible cords are considered as exposed cloth.

(c) Pinhole (in tank wall) - opening through tank wall in which the cloth cords are displaced, with no apparent damage to the cords.

(d) Tank puncture - opening through tank wall, with one or more cloth cords severed.

(e) Weather checking - large number of small cracks in outer coating that do not usually expose cords; caused by exposure to sun and weather. Exposure to heat, humidity, and bright sunlight (ultra-violet rays) shorten tank life. shading tanks increases life expectancy.

(f) Wet spotting - discolored area, usually circular, with no visible flow of fuel.

(g) Seam weeping - discolored area along a seam, with no visible fuel flow.

(3) General terms defined:

(a) Inside coating - layer (or layers) of synthetic rubber applied to the inside of the tank cloth. A nylon layer to limit diffusion may be included in the inside coating.

(b) Outside coating - layer (or layers) of synthetic rubber applied to the outside of the tank cloth.

(c) Tank fitting - aluminum ring, with stainless steel threaded inserts and an O-ring groove, vulcanized into tank wall; cannot be removed without cutting.

(d) Chafer patch - additional ply of coat ad fabric, usually circular, vulcanized to the inside tank bottom, opposite a tank fitting.

(e) Tank handles - rubber coated cloth handles vulcanized to the tank bottom along each side.

(f) Tank labels - rubber labels vulcanized to outside tank top containing ins truct ions and name plate information.

(4) Standards. Table 5-2 sets forth the defects and their extent to determine tank servicability.

b. PREPARATION FOR FILLING.

(1) Aft er the hems are prepared (paragraph 5-10), spread ground cloth within the berm. Position tank in center of cloth.

(2) Inspect tank and correct deficiencies.

Table 5-2. Tank Serviceability Standards

Tank exterior	
Defect	**Extent of defect and serviceability of tank**
Pinhole	Major: Acceptable if satisfactorily repaired by application of emergency repair patch. Pinhole must be carefully enlarged to admit passage of inside portion of patch. One inch of undamaged material must exist from defect to patch edge. Critical: Unserviceable when puncture cannot be repaired by application of emergency repair clamp.
Puncture or Tear	Major: Acceptable if satisfactorily repaired by application of emergency repair patch. One inch of undamaged material must exist from tear or puncture to patch edge (all around). Critical: Unserviceable when puncture cannot be repaired by application of emergency repair clamp.
Blistered Fitting Area	Minor: Acceptable if: - Area does not exceed one-half inch in diameter; - Area has a one-half inch effective bond all around; - Tank serviceability is not affected. Critical: Unserviceable when minor limits are exceeded.

Table 5-2. Tank Serviceability Standards - Continued

Tank exterior		
Defect	**Extent of defect and serviceability of tank**	
Wet Spotting	Minor:	Acceptable if isolated and providing the total number of wet spots does not exceed four per panel or the diameter of any one spot does not exceed 12 inches.
	Critical:	Unserviceable when minor limits are exceeded.
Seam Weeping	Minor:	Acceptable providing the total number of weep spots does not exceed four per seam or the length of any one spot does not exceed 12 inches.
	Critical:	Unserviceable when minor limits are exceeded.
Seam Looseness	Minor:	Acceptable up to a width of one-quarter inch, providing a 1-inch effective bond to seam edge exists and the length of the seam looseness does not exceed 3 inches.
	Critical:	Unserviceable when minor limits are exceeded.
Loose Seam Reinforcement Patch	Minor:	Acceptable providing a one-half inch seal exists around patch perimeter.
	Critical:	Unserviceable when minor limits are exceeded.
Loose Tank Fitting Reinforcement Patch	Minor:	Acceptable providing a one-half inch seal exists around patch perimeter.
	Critical:	Unserviceable when minor limits are exceeded.

Table 5-2. Tank Serviceability Standards - Continued

Tank exterior	
Defect	**Extent of defect and serviceability of tank**
Loose Outside Coating	Minor: Acceptable if the pocket formed does not contain liquid and providing the loose area does exceed 2 square feet or extend into fitting or seam area. Critical: Unserviceable when minor limits are exceeded.
Loose, Broken, or Missing Tank Handles	Minor: Acceptable providing there is no structural damage to the tank wall which will cause a leak and/or tank failure. Critical: Unserviceable when minor limits are exceeded.
Loose, Torn, or Missing Tank Labels	Minor: Acceptable providing there is no structural damage to the tank wall which will cause a leak and/or tank failure. Critical: Unserviceable when minor limits are exceeded.
	Tank interior
Blistered Fitting Area	Minor: Acceptable if: - Area does not exceed one-half inch in diameter; - Area has a one-half inch effective bond all around; - Tank serviceability is not affected. Critical: Unserviceable when minor limits are exceeded.

Table 5-2. Tank Serviceability Standards - Continued

Tank interior		
Defect	**Extent of defect and serviceability of tank**	
Loose Inside Coating (No External Evidence)	Minor:	Acceptable if the pocket formed by the area of nonadhesion does not contain liquid and providing the loose area does not exceed 2 square feet, extend into fitting or seam area, or contain an opening to the tank interior.
	Critical:	Unserviceable when minor limits are exceeded.
Loose Chafer Patch (No external Evidence)	Minor:	Acceptable since tank is serviceable with or without the chafer patches. Trim or remove all loose areas or, if necessary, remove the entire patch.
Seam Looseness	Minor:	Acceptable providing a one-half inch effective bond exists along each seam edge.
	Critical:	Unserviceable when minor limits are exceeded.

(3) Remove vent-fitting dust cap and install the standpipe.

(4) Connect discharge and suction hoses to appropriate elbows.

(5) Open all valves between the upstream pump and the tank. Be sure the tank outlet valve is closed, or that the next station is prepared to receive fuel.

(6) Inspect all suction hose connections between the pump and the tank from which fuel is drawn.

(7) Prime the pump if necessary (paragraph 5-14a).

(8) Open all suction line valves.

(9) Start the pumping operation (paragraph 5-14b).

c. PREVENTIVE MAINTENANCE. The preventive maintenance services (table 5-3) are performed by the operator. Any condition that the operator cannot correct should be reported immediately for organizational maintenance action. Early detection of defects will in many cases permit repair before it becomes necessary for higher echelon maintenance. Table 5-2 has information that will be useful to the operator in diagnosing tank defects.

5-14. PUMP, 350 GPM. Table 5-4 gives specification data on the 350 gpm pump unit. Refer to NAVAIR 19-1-90, chapter 3, for a more detailed description, pump performance charts, lubrication instructions, preventive maintenance services, and troubleshooting guide. If the 600 gpm pump is used, refer to paragraph 6-15.

a. BEFORE OPERATION CHECKS.

(1) Inspect for tampering or damage since last operation.

(2) Inspect rear of control panel to make sure electrical and mechanical connections are secure.

(3) Check that wheels are securely chocked and support stand is anchored.

Table 5-3. Preventive Maintenance Services

Interval D*	Interval W**	Component	Service and procedure
X		System Area	1. Inspect to prevent accumulation of debris and eliminate fire hazards.
X			2. Cover any spilled fuel with dry sand or flush with water.
X			3. Wipe dirt and grease from hose couplings and adapters, valves, and appurtenances.
	X		4. Cut grass and weeds by use of manual mower or explosion-proof power mower. NOTE Use fireproof chemicals for control of weeds on berms.
X			5. Verify fire extinguishers are in place and complete.
X		Berms	Keep berm clean, dry, and free from combustible vapors; check condition of berm construction.
X		Tanks	1. Inspect vents to insure that there are no obstructions.
X			2. Inspect inlet and outlet fittings to insure that they are securely fastened.
X			3. Inspect operation and position of gate valves (if 4-inch gate valves and/or wye couplings are used at or near tank).
X			4. Make a visual inspection of the tank exterior, checking for leaks, signs of corrosion, or weather checking.

Table 5-3. Preventive Maintenance Services - Continued

Interval D*	Interval W**	Component	Service and procedure
X			5. Inspect weather protection, guy lines, and camouflage.
X			6. Make a visual inspection of the general integrity of the tank position in berms.
X		Hoses	1. Inspect hose assemblies for tight connections at every point to insure that there is no fuel leakage; all KAM LOCK ears should be down.
X			2. Inspect for proper hose type (suction or discharge).
X			3. Inspect for straight line flow; there should be no kinks or sharp curves in the hose.
X			4. Inspect to insure that every hose section is part of a continuous assembly; there should be no open ends.
	X		5. Inspect for blistering or loose outer layer.
	X		6. Inspect for abrasions of outer cover exposing fabric.
	X		7. Inspect for cuts in hose structure that have damaged the fabric.
	X		8. Inspect for soft spots adjacent to nozzles or couplings.
X		Manifolds	Inspect operation and position of gate valves.
X		Other Fittings	1. Inspect operation and position of 4-inch gate valves.
X			2. Inspect wye couplings and manifold units to insure that they are securely fastened.

Table 5-3. Preventive Maintenance Services - Continued

Interval		Component	Service and procedure
D*	W**		
X		Nozzles	1. Inspect operation of hand-operated valve.
X			2. Inspect locking ratchet of hand-operated valve (if incorporated).
	X		3. Inspect grounding wire and grounding attachment to insure that they are securely fastened.
X			4. Inspect nozzles to insure that spouts are securely fastened.

*Daily
**Weekly

Table 5-4. Pump, 350 gpm, Centrifugal, Trailer-Mounted, Specifications

GENERAL	
Length	102 in
Length (Tow Bar In)	75 in
Width	57 in
Height	56 in
Tire Size	7:00 x 16
Tire Pressure	25-30 psi
ENGINE	
Type	air cooled
Horsepower	
24 at	1400 rpm
27 at	1600 rpm
30 at	1800 rpm
32.7 at	2000 rpm
34.5 at	2200 rpm
PUMP	
Number of Stages	one
Total Dynamic Head	275 ft
Maximum Flow	350 gpm
Minimum Flow	20 gpm
Suction Size	4.0 in
Discharge Size	4.0 in

(4) Ground rod is properly installed, and connections between rod and pump frame are tight.

(5) Crankcase oil level is O.K.; fuel tank is full.

(6) Inspect all hoses. Each connection must be properly fitted and fastened, and the lines should be independently supported near the prep. Hoses should be as straight as possible; no kinks or sharp bends.

(7) Inspect pump strainer, clean if necessary.

(8) Inspect the discharge and suction manifolds. If they are not filled, close the suction valve and fill the discharge manifold with the fuel to be pumped.

(9) Check that air vent is open.

b. STARTING.

(1) Prime the engine by actuating the fuel pump primer lever 20 to 30 strokes, or until it moves easily.

(2) Pull the throttle half-way out and turn ignition switch to the ON position.

(3) Insert crank and engage crankshaft; pull up against compression with a vigorous quarter-turn.

CAUTION

Do not try to spin the engine with the crank.

(4) If the engine does not start, pull out the choke and repeat step (3). If the engine still does not start, check the troubleshooting guide.

(5) After start, adjust choke so that the engine runs smoothly, and adjust the throttle so that the tachometer indicates 1,000 rpm.

(6) To start fuel flow, open the suction and discharge valves. If the pomp does not prime after 5 minutes, partially close the discharge valve and increase engine speed to 1,500 rpm for about 5 minutes until prime is made. If still no prime, repeat the prestart priming operation (paragraph 5-14a(8)). If still no prime, consult troubleshooting guide.

(7) Open the discharge valves and slowly increase speed to get the desired flow rate.

c. DURING OPERATION.

(1) Be alert for unusual operation, such as engine overheat ing or running below governed speed, or failure of the pump to deliver full volume or to respond to controls. Stop operation immediately if any unusual noise is heard.

(2) Check gage readings frequently to make sure the oil pressure is normal and that at least 5 inches of manifold vacuum is indicated.

(3) Check frequently for leaks. If a leak is noticed, stop operations and correct immediately. If impossible to stop, record and correct as soon as possible.

d. STOPPING.

(1) Reduce engine speed to idle for 3 to 5 minutes.

(2) Set ignition switch to the OFF position.

(3) Close discharge manifold gate valves.

(4) Close suction manifold gate valve to retain prime.

5-15. FILTER-SEPARATOR. The filter-separator (table 5-5) removes solids and water contamination from fuels using two types of cartridges containing filter elements. The fuel flows through the coalescer cartridges, then through the separator cartridges end onward to the discharge fitting. The fuel diagram, figure 5-2, shows the fuel path.

Table 5-5. Filter-Separator Data

General data		Filter case	
Length	68 in	Rated flow	350 gpm
Width	28 in	Working pressure	75 psi
Height	57 in	Hydrostatic test pressure	125 psi
Weight			
Dry 600 lbs		Operating temperature	32° - 115°F
Wet 1651 lbs		Coalescer cartridges	nine
		Separator cartridges	ten

a. BEFORE OPERATION PROCEDURES.

(1) Make sure unit is installed on level ground, that the area has been cleared of rocks and metal objects which could cause sparks, and that a drainage ditch has been dug to carry away separated water from the drain valve.

(2) Check the grounding rod for proper connection.

(3) Check all cover fasteners, flange bolts, and miscellaneous fittings for tightness.

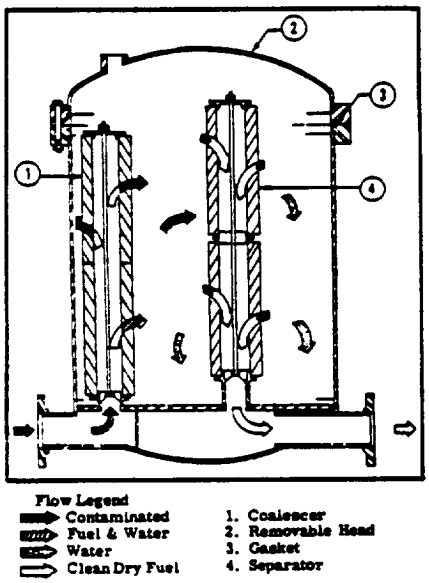

Figure 5-2. Fuel Flow Diagram

(4) A line test should be made for leaks. If initial tests for leaks are O.K., check the following items before placing filter-separator in use:

(a) Manual drain valves closed.

(b) Downstream blocking valve in the outlet piping closed.

(c) Liquid level gage valves closed.

(d) Pressure gage valve closed.

(5) Inspect couplings to make sure the cam arm is in good condition and functioning properly. Replace any coupling gaskets that do not form a tight seal.

(6) Inspect the discharge valve for loose or missing parts and for cracks or breaks in the housing.

(7) Inspect fuel lines and fittings while they are under pressure to make sure they are in good condition, securely supported, and not leaking.

(8) Drain liquid from the filter-separator accumulation sump into a clean container end check for microbiological growth. (See paragraph 3-7.) Drain all water from the sump and take a second sample. Check for wat er and sediment. (See paragraphs 3-9 end 3-10.)

(9) Partially open the gate valve in the outlet line.

(10) Open the inlet gate valve slowly and allow unit to fill slowly.

(11) When the unit is completely filled, open the inlet and outlet gate valves all the way. Then, slowly open the upper and lower main valves on the liquid level gage until the gage glass is filled.

(12) The valves in paragraphs 5-15a(9), (10), and (11) above should remain open at all times when the unit is in use.

b. DURING OPERATION SERVICES AND CHECKS.

(1) Be alert for leaks or unusual pressure changes. Leaks that cannot be stopped by tightening the packing gland nut or surrounding bolts are causes to stop operations immediately.

(2) Take the pressure difference between inlet and outlet under full flow conditions at the start of operations and check at frequent intervals during operations when the unit is on full stream end under pressure. The procedure is:

(a) Rotate gage valve handle so that the pointer points to INLET. Record inlet gage reading in the pressure drop log (appendix D).

(b) Rotate handle to OUTLET. Record gage reading.

(c) Subtract outlet pressure from inlet pressure to get pressure drop, an indication of element condition. Element change requirements are listed in subparagraph 5-15d.

(3) Check the sight glass periodically for water, and if water is present, drain manually.

(4) Fuel quality must be checked once each day. Take two samples as in 5-15a(8) above, under full-flow conditions. The first sample will almost always contain water, but the primary check is for microbiological growth (paragraph 3-9). Drain the water from the sump and take a second sample to check for water, sediment, and API gravity (paragraphs 3-9 and 3-10). Record results of tests.

c. AFTER OPERATION SERVICES,

(1) Check inlet-outlet pressure differential (paragraph 5-15b(2)) to determine whether or not cartridges must be changed.

(2) Open manual drain valve to drain all water from unit. Close valve when clean fuel begins to flow from unit.

(3) Perform quality control checks for appearance and API gravity (paragraphs 3-9 and 3-10).

(4) Consult NAVAIR 19-1-90 for preventive maintenance and troubleshooting information.

d. ELEMENT CHANGE.

(1) Requirements.

(a) TAFDS systems without the go/no-go fuel monitor downstream of the filter-separator require that all elements be changed after 1 year of use, or when the pressure drop across the filter-separator is 15 psi, whichever occurs first.

(b) With the fuel monitor installed downstream, elements must be replaced after 2 years of use, or when the pressure drop reaches 20 psi or when the fuel monitor triggers (shuts down).

(c) When the fuel monitor is installed independently of the filter-separator, the maximum allowable pressure drop across the fuel monitor is 20 psi. In conversion kits where the fuel monitor is in the filter-separator case, the maximum allowable drop across the entire case is 25 psi.

(d) When an element change is required before the age limit occurs, the source of contamination should be located and corrected.

(2) Element change procedure.

(a) Close upstream and downstream gate valves nearest the filter-separator.

(b) Drain the case by opening the manual drain valve. If a heater is installed, turn off before draining. Have containers available or make provisions to drain fuel away from equipment.

(c) Remove nuts and bolts holding cover in place; remove cover.

(d) Remove hex nuts and washers; lift off separator and coalescer spiders.

(e) Remove hex nuts and gasket washers which hold the separator and coalescer elements on the center rods; lift out the elements.

(f) Flush interior of case with clean fuel.

(g) Install new elements by reversing the procedures (c) through (e). Tighten hex nuts to between 8 and 10 foot-pounds torque.

WARNING

Use caution in handling used filter-separator cartridges because of the toxic effects of the fuel additives concentrated on the filter elements.

CAUTION

Do not expose filter-separator cartridges to moisture. Keep in waterproof bags until installed. Do not install in the open during bad weather.

NOTE

Inspect O-ring head gaskets, and other seals prior to reinstallation.

(h) Replace head and tighten headbolts.

(i) Ensure proper venting to eliminate air; refill case slowly and check for leaks.

(j) Circulate fuel, starting flow at a reduced rate. Circulate at least 1,000 gallons before dispensing fuel.

(k) Frequently take samples downstream of the filter-separator and make the appearance test (paragraph 3-9).

(l) Read and record pressure drop across the filter-separator (paragraph 5-15b(2)).

(m) Stencil or otherwise mark on the outside of the filter-separator case the date of installation of new elements.

5-16. FUEL MONITOR. (Table 5-6.) The fuel monitor is installed downstream of the filter-separator, and has 20 filter elements or fuses to remove fuel contaminants that are not removed by the filter-separator. The fuel enters the inlet chamber and is filtered through the filter elements into the outlet chamber. The pressure gage measures either

Table 5-6. Fuel Monitor Data

Length	36 in	Capacity (new fuses)	400 gpm
Width	34 in	Maximum differential pressure (new fuses)	5 psi
Height	24 in		
Weight (dry)	110 lbs	Maximum pressure	225 psi

inlet or outlet pressure depending on the position of the selector valve. The individual fuse assembly has a tube filled with thin washers except for about 1 inch at one end. which is closed with a plastic piston forced against the washers by a spring. At the other end of the tube is the outlet. Fuel flows into the inlet ports through passages between washers, and out through the nipple. Accumulation of contaminants decreases space between washers and increases flow resistance until fuel flow is shut off.

a. BEFORE OPERATION SERVICES.

(1) Check that fuel monitor is downstream of the filter-separator.

(2) Place system under pressure, check for leaks.

(3) Turn pressure gage selector valve to OUTLET, note the pressure; repeat in INLET position. Record the pressures in the pressure drop log (appendix D).

(4) Subtract outlet pressure from inlet pressure, record the difference in the pressure drop column of the pressure drop log.

b. DURING OPERATION SERVICES.

(1) Determine and record pressure drop across unit (paragraph 5-16a) each time fuel is dispensed.

(2) If the pressure drop rises to more than 20 psi over a short period of time (5 minutes) or if flow stops, it indicates faulty filter-separators upstream. Locate and correct trouble before continuing operation; notify organizational maintenance.

c. AFTER OPERATION SERVICES.

(1) Inspect for leaks and correct discrepancies or report them to organizational maintenance.

(2) Inspect ground rod cable to make sure it is not frayed or broken and that the clips can bite through paint to bare metal. Check that all connections are tight; tighten or replace loose or missing hardware.

5-17. METER. The meter (table 5-7) is used for fuel record-keeping, and to assist in recirculation procedures (paragraph 3-13).

Table 5-7. Meter Data

General data	
Length	61.25 in
Width	28.00 in
Height	30.75 in
Weight	270.00 lbs
Gate valves	
Quantity	Three
Size	4.00 in
Meter	

a. BEFORE OPERATION CHECKS.

(1) Check tightness of mounting cover and flange bolts, nuts, and washers.

(2) Remove cap and inspect strainer screen for breaks and proper seating.

(3) Check gate valves for proper operation.

(4) Reset upper register to 0 and record cumulative total from the lower register.

(5) Check grounding rod for secure installation.

b. DURING OPERATION SERVICES. Be alert for leaks and other defects. If leaks cannot be stopped by tightening packing gland nuts or bolts around gaskets, stop operations and correct defects immediately. If unable to stop, record deficiency and correct as soon as possible.

c. AFTER OPERATION SERVICES. Perform before operation checks and correct any defects.

5-18. OPERATION UNDER OTHER THAN NORMAL CONDITIONS. Procedures for operating under abnormal conditions are set forth in table 5-8.

5-19. FULL SYSTEM OPERATION.

a. DISPENSING STATIONS. With a full TAFDS, 18 dispensing stations can be set up, each with a nozzle stand and nozzle assembly. Spacing and location will depend on the local situation, with due consideration to the safety of adjacent equipment in case of fire.

b. DISPENSING PROCEDURES. Refueling requires two fuel operators, one to handle the nozzle and one to operate the dispensing equipment.

(1) Aircraft personnel taxi or tow dearmed aircraft into refueling position, chock securely, shut down aircraft engines, turn off all switches.

(2) Check for hot brakes.

(3) Ground aircraft and attach nozzle bonding wire to bare metal on the airframe.

(4) Find out from aircraft personnel the amount of fuel required.

Table 5-8. Operation Under Other Than Normal Conditions

Component	Abnormal conditions				
	Extreme heat	Extreme cold	High winds	Sandy or dusty	Salt water areas
Tanks	Maximum operating temperature is 160° F. Keep tank cool by: - covering with camouflage net, shade cloth, tarpaulin, or tent. Do not block free circulation of air about container. - Place tank in shade, cover with leafy branches or other greenery. - Cover tank with wet burlap or other fabric; soak frequently with water.	Do not handle tank in temperatures below -20° F.	Bank dirt around sides of tank to prevent rolling. Guy ropes may be passed over container and anchored to ground stakes. DO NOT tie guy ropes to tank handles.		
Pump	- Locate in well-ventilated area. - Protect cooling system by insuring all shrouding is installed and in good condition. Keep cylinder heads and fins clean. - Select correct lubricants for temperature. - Fill fuel tank at end of each days operation to prevent vapor formation.	Shelter from elements with a windbreak if possible. - Before filling tank, clear area around filler cap and dispenser equipment of snow, ice, and moisture. - Keep filler cap tight. - Keep fuel tanks full if possible.		Service air cleaner as often as necessary. When adding oil, remove sand and dirt from around filler neck, keep crankcase breather cap clean. Lubricate as specified. Keep stores of oil and fuel tightly closed; store under cover if possible.	Remove rust immediately, protect with paint if available, or light coat of oil.

Table 5-8. Operation Under Other Than Normal Conditions - Continued

Component	Abnormal conditions				
	Extreme heat	Extreme cold	High winds	Sandy or dusty	Salt water areas
Filter - Separator	Protect from direct sunlight by covering with tarpaulin or other suitable cover.	In temperatures below freezing (32° F), must be installed in well-ventilated shed heated by circulating hot air to prevent freezing of separated water. Thoroughly drain before storing.		Protect from blowing sand or dust with tarpaulin or locate in well-ventilated shed, if possible. Leave dust caps and plugs off only long enough to connect or remove hoses. Inspect all couplings for foreign matter before installing. Circulate fuel through unit prior to dispensing to insure removal of all foreign matter.	Remove rust immediately, protect with paint or light coat of oil. Use light coat of oil on unpainted parts. Inspect regularly.
Fuel monitor	Not materially affected by abnormal conditions				
Meter	Protect from sun with tarpaulin or other covering.	Protect from ice and snow by placing on platform under protective cover.			Remove rust immediately, protect with paint or coat of oil. Inspect regularly.

(5) Attend nozzle constantly. When the tank is nearly full, slow flow rate to avoid overflow.

(6) Replace filler caps securely.

(7) Remove bond and ground connection after all fuel flow has stopped.

(8) Record fuel dispensed.

c. HOT REFUELING. Hot refueling is the transfer of fuel from the TAFDS to an aircraft while the engines are running.

CAUTION

Ear protective devices shall be worn at all times when near operating aircraft engines.

(1) The pilot will taxi the aircraft into positon, guided by a qualified plane director. The aircraft must be dearmed, all electric and electronic equipment turned off, and brakes checked to make sure they are not hot. TAFDS personnel must insure area is clear of loose objects.

(2) Aircraft must be securely chocked and properly grounded.

(3] The nozzle operator will attach the bonding wire to the aircraft before attaching the pressure nozzle to the single-point refueling receptacle.

(4) If *the* aircraft is to be serviced through the inflight refueling probe, the nozzle operator will attach the nozzle adapter to the probe.

(5) The refueling area operator will determine by prearrangement or signal the amount of fuel required, that all attachments are properly made, and that all checks and safety precautions have been carried but before opening the delivery valves.

(6) When refueling is complete, the operator will shut off fuel flow, evacuate the hoses, and signal the pilot and nozzle operator that the operation is complete.

(7) The nozzle operator will disconnect all refueling equipment, removing the grounding wire last.

(8) Chocks will be removed and the aircraft taxied clear of the area.

NOTE

The basic manual for aircraft refueling ashore is NAVAIR 06-5-S02. If a conflict is discovered between this manual end NAVAIR 06-05-502, the latter will govern, and the difference should be reported on Form NAVM-10772 for resolution.

SECTION IV

HERS (HELICOPTER EXPEDIENT REFUELING SYSTEM]

5-20. GENERAL. The HERS (Helicopter Expedient Refueling System) is designed for refueling helicopters at remote locations at the rate of 50 gpm from each of two dispensing stations. The HERS equipment performs the same functions as similar TAFDS components, but on a smeller scale. The system is modular in design to allow easy replacement of faulty items, and the addition of components to increase capability. The system is air transportable and made to permit movement and placement using a minimum of cargo-handling equipment.

5-21. PHYSICAL DESCRIPTION. The HERS consists of the following components:

a. Twelve 500-gallon collapsible fuel drums.

b. One pump assembly, 100 gpm capacity.

c. Two 50 gpm filter-separators and fuel monitors.

d. Two meter assemblies.

e. Two pressure (single point) nozzles.

f. Two overwing (gravity) nozzles.

g. Two nozzle stands.

h. Suction and discharge hoses, 2-inch-diameter, in 10-foot and 15-foot lengths.

i. Three ground rods end wire.

j. Wyes, coupler valves, couplers, adapters, and special fittings.

k. One storage container.

5-22. FUNCTIONAL DESCRIPTION.

a. PUMP ASSEMBLY. The 100 gpm pump assembly consists of the engine and pump mounted on a frame. The pump impeller is mounted directly on an extension of the engine crankshaft. The spark-arresting type muffler is connected to the engine by a 4-foot metal hose to allow placing it above ground level away from concentrations of fuel vapor.

b. FILTER-SEPARATOR ASSEMBLY. The filter-separator assembly consists of the filter-separator and fuel monitor mounted on a rollover frame.

(1) Two pressure gages on the separator body indicate inlet and outlet pressure, and a signal gage indicates the amount of water in the separator. The elements (4) must be changed when the pressure difference is 20 psi or after 2 years.

(2) A flow control valve mounted on the separator inlet restricts fuel flow to 50 gpm.

(3) The fuel monitor monitors the performance of the filter-separator elements and shuts off fuel flow if the filtering capacity is exceeded. A 3-way valve and pressure gage allows measurement of pressure at the filter-separator inlet (INLET position), between the filter-separator and monitor (CENTER position) , and at the fuel monitor outlet (OUTLET position).

c. METER ASSEMBLY. The meter is connected downstream of the fuel monitor, and its resettable counter records fuel flow in gal ions.

d. COLLAPSIBLE FUEL DRUM. Twelve 500-gallon drums furnished allow four to be in use while eight are being refilled. The nonvented fabric drums are designed for a working pressure of 4 to 5 psi and a maximum pressure of 30 psi. Swivel plates on each end permit towing with a yoke for

short distances over smooth ground. An empty drum can be folded to about one-sixth its filled size for easy handling.

5-23. HERS OPERATIONS. HERS operations are very similar to those of TAFDS, and the same safety precautions apply. Preparation, installation, servicing, and maintenance instructions for HERS components (less the engine) are contained in chapters 1, 2, and 3 of TM-07387B-14. Engine operation and maintenance is covered in TN-03935V-14.

SECTION V

SECURING SYSTEM FOR REUSE, STORAGE , OR MOVEMENT

5-24. GENERAL. When taken out of operation, TAFDS unit assemblies and components should be disassembled, purged of residual fuel and fumes, cleaned, and repacked for future use. It is almost impossible to thoroughly clean all components, but they can be purged for safe reshipping.

5-25 DISASSEMBLY PROCEDURES.

a. Pump fuel remaining in system into the smallest number of tanks possible.

b. Drain back all hoses.

c. Remove fuel remaining in the system by filling drums or other suitable containers.

d. Drain, ventilate, and dry all components as necessary.

e. Purge components as required.

f. Preserve interior of components by coating with a thin layer of SAE No. 10 nondetergent oil.

g. Seal all quick-connect fittings and turn all valves one-quarter open.

h. Drain all hoses and purge with water to reove fumes. Close both end fittings with caps.

i. Repack complete units in their original chests when possible, taking care to ensure that collapsible tanks are packed so as to prevent damage to the cloth.

SECTION VI

DEMOLITION

5-26. GENERAL. When capture or abandonment of fuel handling equipment to an enemy is imminent, the responsible unit commander must make the decision to either destroy the equipment or to render it inoperative. Based on this decision, orders are issued which cover the desired extent of destruction. Unit SOP's should have a destruction plan developed to fit the local situation.

5-27. DEMOLITION BY MECHANICAL MEANS. Puncture cans and drums with axes, picks, bayonets, or other available tools, making at- least one hole in each and or opposite sides. Cut hoses and fabric tanks, using slashes large enough to prevent repair. Smash metal equipment, gages, meters, controls, fuel monitors, and filter separators with sledge hamners, crowbars, picks, or axes.

5-28. DEMOLITION BY MISUSE. Drain the radiator (if applicable) and crankcase of motor-driven equipment. Put sand, nuts, bolts, sugar, or broken glass into the radiator opening, oil filler tube, and fuel tank. Disconnect the radiator fan and run the engine at full throttle.

5-29. DEMOLITION BY EXPLOSIVES OR WEAPONS FIRE. If time permits and equipment is available, major items can be prepared for demolition by explosives, supplemented by incendiary rounds to ignite the spilled fuel to complete destruction by burning.

CHAPTER 6

AAFS (AMPHIBIOUS ASSAULT FUEL SYSTEM) OPERATIONS

SECTION I

AAFS COMPONENTS

6-1. GENERAL . The AAFS is the aggregate of a number of self-contained units to receive, transfer, and dispense all types of tactical fuel. It is used to stock 600,000 gallons of fuel and to move it inland up to 3-1/2 miles. Table 6-1 lists the components of the AAFS. The system can be hooked up in a variety of layouts. TM-06674A-15 (Part One) has detailed information on components and layouts.

Table 6-1. AAFS Components

Component assembly	Number
Beach unloading station	one
Drum unloading units	two
Booster stations	two
Tank farms, 120,000-gallon capacity	five
Dispensing stations, six-outlet	two

6-2. TANKS . The collapsible 20,000-gallon storage tanks are made of nylon fabric, impregnated with fuel-resistant material, and can be folded and stored in the tank chest. The tank chest also has space to store the inlet, outlet, and vent assemblies, and the tank emergency repair kit.

6-3. HOSES, COUPLINGS, AND VALVES. Suction type hose is wire-reinforced to stand high vacuum, but will not take high internal pressure. The discharge hose will collapse under vacuum, but will take up to 125 psi pressure. Each section of hose has quick-disconnect couplers and adapters, male on one end and female on the other. The adapter is inserted into the coupler and the cam arms are depressed to form a leakproof seal. All valves in the system are of the rising-stem type (except on the drum-unloading suction stub) .

6-4. TRAILER-MOUNTED PUMP. The pump (paragraph 6- 15) is of self-primary centrifugal type rated at 600 gpm at a discharge pressure of 125 psi. It is also used in many TAFDS systems.

6-5. PRESSURE REGULATOR. The pressure regulator (paragraph 6-16) has a hydraulic regulating valve to control excessive pressures in fuel lines. Its primary use is on the downgrade side of steep

slopes between a pumping station and a tank farm or between two pumping stations. The valve is factory-set at 65 psi, but can be adjusted in the field to meet local conditions.

6-6. METER-REGISTER. The 3-inch meter-register (paragraph 6-17) ❑easures gal ions of fuel at flow rates from 50 to 650 gpm at a maximum pressure of 200 psi. The meter is resettable for each delivery and also has a totalizer. The 2-inch meter-register does not have a totalizer, and is intended for use at flow rates from 25 to 250 gpm.

6-7. FILTER-SEPARATOR. The filter-separator (paragraph 6-18) is a skid-mounted unit rated at 350 gpm flow capacity, at a working pressure of 75 psi, designed to remove contaminants from fuel.

6-8. FUEL MONITOR. The fuel monitor (paragraph 5-16) , also called a go/no-go gage, is installed downstream of the filter-separator to monitor fuel quality. I f contaminants in the fuel exceed a safe level, the filter elements (fuses) will shut off all flow, and indicate that the filter-separator upstream is malfunctioning.

6-9. GENERAL REPAIR KIT. The general repair kit consists of spare parts, gaskets, packing, and a limited number of tools for routine maintenance, replacement, and repair of AAFS equipment. It includes hose evacuation kits and a gas detector. All items in the kit are stored in three chests. The kit should not be confused with the emergency repair parts stored in each tank chest.

SECTION II

PREPARATION FOR USE

6-10. GENERAL . Site selection for the AAFS is subject to the same considerations as TAFDS sites (see paragraph 5-10). The AAFS is much larger, having five tank farms, two booster stations, and 3-1/2 miles of discharge hose.

6-11. TECHNICAL CONS IDEMTIONS. The height and distance that a pump can move fuel depends on the pump discharge pressure, the unit weight of the fuel, and friction loss in the hose. For any given pump pressure and fuel specific gravity, there is a maximum height (static head) to which the liquid can be pumped. Also, for a given pump pressure and a fixed friction loss per unit length

of hose, there is a limit to the horizontal distance that fuel can be pumped. To pump fuel from one station to another, there is a pressure requirement to overcome gravity and a pressure requirement to overcome friction.

a. PUMP LIFTING CAPACITY. The height that a fuel can be listed by a given pump pressure (static head) can be calculated by the formula:

Static head (feet) =

$$\frac{\text{Pump Pressure (psi)}}{\text{Unit fuel weight (lbs per gal)}} \times 19.25$$

For quick calculation use 40 psi pressure loss for each 100 feet increase in elevation and 40 psi increase for each 100 feet of drop.

b. MAXIMUM HORIZONTAL PUMPING DISTANCE. Based on the heaviest liquid likely to be pumped (diesel fuel) , the friction loss per 1,000 feet of hose is 30 psi. The maximum horizontal distance, in thousands of feet, that fuel can be pumped is determined by dividing the pump discharge pressure by 30.

c. BOOSTER STATION POSITIONS . Plot the location of the beach unloading station and tank farm locations on the largest scale contour map available. Draw in pipe line route and calculate the length of hose. Determine the difference in elevation between stations. The pressure at any one point is:

$$Px = Pp - (Pe + Pf) + Pd$$

when

Px = Pressure at any point x

Pp = Pump discharge pressure

Pe = Pressure decrease due to increase in elevation

Pf = Pressure decrease due to friction loss

Pd = Pressure increase due to drop in elevation

Pp is normally 125 psi, but other lower values are possible. Divide the elevation difference in hundreds of feet by 40, and divide the hose length in thousands of feet by 30, and add to get the sum of Pe and Pf. Pd is determined by dividing elevation drop in hundreds of feet by 40. Use a

trial and error method to locate one or more boosters to ensure fuel delivery.

d. **PRESSURE REGULATORS.** When drops in elevation occur, it may be necessary to install pressure regulators to protect the hose from pressures over 125 psi when static pressures exceed friction losses at flow conditions, or static pressures become too great under no- flow conditions. Use the formula above to determine the pressure at any given point. Normally, regulators are spaced at a pressure differential of 85 psi and adjusted to reduce the pressure to 20 psi on the downstream side. It may be easier in practice to adjust the pump pressure so that the pressure at the start of the downhill side nears zero. Then the pressure at any downhill point is simply:

$$P_x = P_d - P_f$$

6-12. **SITE PREPARATION.** The discussion in paragraph 5-10 applies to AAFS sites. The tank farm area should be reasonably level and large enough to accommodate all equipment. The preferred arrangement of berms is shown in figure 6-1, and a recommended berm construction is shown in figure 6-2.

6-13. **INSTALLATION.**

a. **TANKS.** Tank and hose data are shown in table 6-2.

(1) Inspect berm and remove all objects that might damage tank.

(2) Spread ground cloth in berm.

(3) Unroll tank in berm.

(4) Install vent standpipe. Remove dust cap and attach the standpipe assembly to the fitting adapter.

(s) Check inlet and outlet closures. Torque all bolts from 20 to 30 inch-pounds.

(6) Install inlet and outlet fittings. The adapter (male) must be installed toward the pump, and the coupler (female) toward the fuel supply source. If the ground is not level, install the outlet on the low side when possible. Unlevel ground will tend to overfill and overstress the lower tanks, shortening their life.

(7) Connect inlet and outlet hoses.

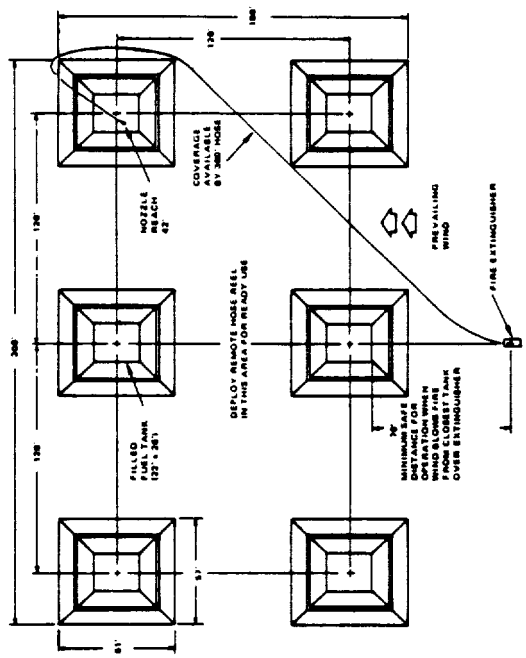

Figure 6-1. Tank Farm Arrangement

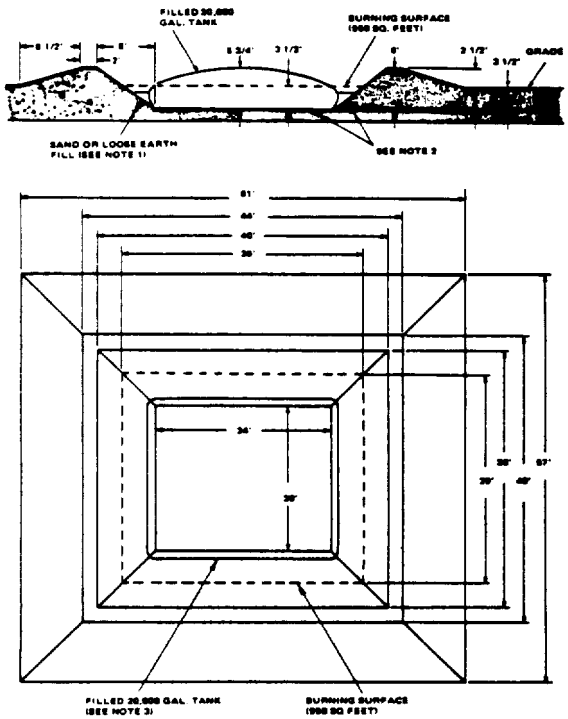

NOTES:

1. FILL WITH SAND OR LOOSE EARTH AFTER TANK IS FILLED. SUPPORT TANK UP TO POINT WHERE SIDES BECOME VERTICAL.
2. COMPACT WALLS AND FLOOR OF BERM WITH TRACKED VEHICLE
3. FILLED TANK DIMENSIONS – 26' x 34'. EMPTY TANK DIMENSIONS – 24' x 28'.
4. VOLUME OF EARTH DUG OUT BELOW GRADE EQUALS VOLUME OF EARTH IN DIKES ABOVE GRADE.
5. VOLUME OF BERM EQUALS 48,000 GALS.

Figure 6-2. Berm Construction

Table 6-2. AAFS Tank and Hose Data

Hose, Discharge

Size	Weight	Working Pressure
2" x 25'	20 lbs	100 psi
2" x 50'	37 lbs	100 psi
4" x 50'	66 lbs	125 psi
6" x 50'	118 lbs	125 psi

Hose, Suction

Size	Weight
2" x 25'	42 lbs
4" x 25'	95 lbs

Tank, Fabric, 20,000 gal. Capacity

Empty	
Width	24' 4"
Height	N/A
Length	28'
Weight	275 lbs
Filled	
Width	22' 3"
Height	5' 9"
Length	25' 8"
Ground Cloth	
Length	28'
Width	24'
Weight	125 lbs
Chest	
Width	31"
Height	27"
Length	164"
Weight	(w/tank) 815 lbs
Weight	(empty) 325 lbs

b. PUMPS Pumps must be placed on firm level soil, and the inlet manifold at (or near to) the supply source level. Avoid suction lifts in excess of 10 feet especially in hot weather. Warm volatile fuels (gasolines end JP-4) vaporize easily, causing the pump to lose its prime as large amounts of vapor pass through it. Extend the chassis stand support and firmly chock each wheel. Drive the ground rod into the ground, leaving 3 to 6 inches exposed, and connect ground wire to the pump .

c. QUICK-COUPLING UNITS. All connections use quick-disconnect couplers and adapter. Slide adapter into coupler and depress cam arms to lock joint

d. HOSES. When joining hoses or hooking into mechanical units the flow direction is from adapter (male) to coupler (female) . The inlet side of each component is fitted with a coupler, and each outlet has an adapter. Use the nestable pipe culvert when necessary to prevent hose damage.

e. PRESSURE REGULATOR. Couple into line at locations determined necessary.

f. FILTER-SEPARATORS. Install on a reasonably level site and provide for drainage of separated water. Install between meter and tank farm prep. If the AAFS is supplying fuel to a TAPDS, install the filter-separator upstream of the TAFDS tanks.

g. NETERS. Meters are installed between the filter-separator and the dispensing nozzle in a reasonably level and stable area. The ground rod and wire should be installed immediately upon locating the unit.

h. FUEL MONITOR. Install downstream of the filter-separator in the discharge line on a reasonably flat surface capable of supporting the weight

i. FITTINGS, MANIFOLDS, AND ACCESSORIES. Various fittings, manifolds, and accessories used to hook up the AAPS are described in detail in TM-06674A-15, Part One.

SECTION III

OPERATING INSTRUCTIONS

6-14. TANKS.

a. Connect tank into system by connecting the suction and discharge hoses to the appropriate elbows after installing vent.

b. Open valves between pump and tank. Tank outlet valve should be closed unless the next station is prepared to receive fuel.

c. Start pump (paragraph 6-15) . Watch for leaks.

d. Refer to TM-06674A-15, Part Three, for cleaning and repair instructions.

6-15. TRAILER-MOUNTED 600 GPM CENTRIFUGAL PUMP.

a. PLACING IN OPERATION. Pump and engine data are shown in table 6-3. Table 6-4 summarizes the operator's services. To place the pump in operation:

(1) Perform before operation services (table 6-4) .

(2) Open the pump suction and discharge lines; line up the by-pass or recirculation line.

(3) Close discharge check valve manually.

(4) Open air eliminator petcock.

(5) Close pump to fuel tank petcock.

(6) Turn on engine instrument switch.

(7) Retard throttle to idle position.

(8) Turn on engine booster pump switch when operating engine on automobile gasoline.

(9) Pull out safety override control and hold out until engine oil pressure is about 40 psi.

(10) Push starter button in.

Table 6-3. AAFS Pump and Engine Data

GENERAL	
Length Overall	152-1/2 in
Width	72 in
Height	71-3/4 in
Tire Size	9.00 x 16
Tire Pressure	50 psi
PUMP	
Manufacturer/Model	Gorman-Rupp/604
Type	Single-Stage Centrifugal
Volume Flow	600 gpm
Total Dynamic Head	340 ft
Suction Size	Two 4 in, one 6 in
Discharge Size	Two 4 in, one 6 in
ENGINE	
Manufacturer	Detroit Diesel, GMC
Type	Water-cooled, 3 cylinder in-line
Model	5034-7298
Cylinder Bore	3.875 in
Stroke	4.5 in
Total Displacement	159.3 cubic in

Table 6-4. Pump Operator's Daily Services

Intervals			Procedure
B	D	A	B = Before Operations D = During Operations A = After Operations
X		X	FUEL. Inspect the fuel supply. Insure that the tank is full.
X	X	X	COOLANT. Inspect the coolant level in the radiator. Add if necessary. Ensure antifreeze protection.
X	X	X	LUBRICATION OIL. Inspect the oil level in the crankcase. Add if necessary.
	X		AIR CLEANER. Inspect the restriction gage. Service filter element if necessary.
	X		INSTRUMENT GAGES. Inspect pressure and temperature gages and the ammeter. Correct any discrepancy indicated.

Table 6-4. Pump Operator's Daily Services - Continued

Intervals B	D	A	Procedure
X	X	X	SWITCHES AND WIRING. Insure that the switches are properly set, and that the wiring and switches are secure. Remedy as necessary.
X	X	X	LEAKS. Inspect for leaks, paying particular attention to the engine cooling system, oil, fuel lines, and connections. Correct deficiencies or log for future correction.

CAUTION

If engine fails to start, do not press starter button again until cranking motor stops turning to avoid serious damage to cranking motor.

NOTE

If the engine fails to start after four cranking periods, refer to trouble-shooting procedures in paragraph 3-29 of TM-06674A-15.

(11) Adjust throttle to give 1,500 rpm.

(12) Turn off engine booster pump switch, if used.

(13) Check pump suction gage for an indication that vacuum exists.

(14) After pump has primed and is pumping adjust throttle to give 1,800 rpm until entire discharge hose is filled.

(15) Allow unit to recirculate fuel for 5 minutes at idle speed.

(16) Pump fuel by bringing engine up to the required rpm while simultaneously opening the discharge valve to the system and closing off the recirculating line. Pumping capacity has been reached when no more gain in vacuum is indicated on the suet ion gage. Table 3-3 of TM-06674A- 15 gives the rpm required to pump different fuels at various rates of flow.

(17) cavitation is the forming of "cavities" or bubbles in the fuel at the impeller if the engine speed is increased beyond the point of maximum suction. Cavitation is indicated by a loud cracking noise in the pump housing caused by the force of the Collapse of the bubbles and can be very harmful to the pump.

(18) Use the performance curve in table 3-3 of TM-06674A-15 to determine engine rpm limits.

CAUTION

If necessary to use the starting aid (temperatures below 40° F), do not actuate more than once with the engine stopped. More than one actuation will overload the engine air housing with the starting aid fluid and could cause an explosion.

b. STOPPING.

(1) Remove load by shifting to the recirculating or bypass line, and decrease rpm.

(2) Run at idle speed for 5 minutes, pull the PuLL TO STOP control, and hold until the engine stops rotating.

(3) Close suction and discharge gate valves.

(4) Turn engine gage switch off.

c. SERVICES. Perform after operation services indicated in table 6-4. Correct deficiencies before next operation.

6-16. PRESSURE REGULATOR. (Table 6-5)

a. PLACING IN OPERATION.

(1) Place regulator in position with the directional arrow on the housing pointed in the direction of flow.

(2) Install ground rod by driving it a minimum of 2-1/2 feet into the ground. Connect ground wire.

(3) Check unit and hose couplings for foreign matter; install hoses.

(4) When fuel is moving through the system, check inlet and outlet pressures. If the calculated pressures are not being obtained,

adjust the reducing valve and flow control valve as necessary. (Refer to Part Four, TM-06774A-15.)

Table 6-S. Pressure Regulator Data

Pressure Regulator	
Size	6 in
Maximum pressure	300 psi
Set pressure	30 psi
Minimum pressure	30 psi
Capacity	350 gpm
Weight	190 lbs
Skid and Frame Assembly	
Length	36 in
Width	24 in
Height	30 in
Upper Strainer Assembly	
Size	1/4 in
Screen	40 mesh/in
Material	Bronze
Lower Fuel Strainer	
Size	3/8 in
Screen	40 mesh/in
Material	Brass, cadmium plated
Selector Control	
Size	1/4 in SAE
Type	Three-way
Material	Brass or bronze
Pressure Gage	
Dial size	3-1/2 in
Type	Bronze bourdon tube
Graduation	0-300 psi
Material	Cast brass
Reducing Valve	
Size	3/8 in
Range	30-110 psi

b. REMOVING FROM SERVICE.

(1) Check that inlet and outlet hoses have been drained, and pressure reading on both sides is 0.

(2) Remove hoses.

(3) Drain residual fuel in regulator into a suitable container.

(4) Replace dust covers.

(5) Retrieve groundwire and rod.

c. SERVICES, Operator's daily services are in table 6-6. Refer to Part Four of TM-06774A-15 for preventive maintenance and troubleshooting.

Table 6-6. Pressure Regulator Operator's Daily Services

Intervals			Procedure
B	D	A	B = Before Operations D = During Operations A = After Operations
X	X		PRESSURE REGULATING VALVE. Make a visual inspection for missing parts and cracks in the housing. If dust covers were not secure, make sure there is no foreign matter inside the unit. Check for leaks around the cover gasket and flange gaskets. Check the bottom of the valve body for the presence of fuel which would indicate a leak. Observe inlet and outlet pressures for pulsating operation; adjust the flow control valve as necessary to smooth out operation.
X	X		REDUCING VALVE. Make sure the lock nut on the adjusting screw is tight, and the cover is secure. Check tubing connections. Check for leaks. Adjust to the desired pressure, if necessary.
X	X		SELECTOR CONTROL. Move the selector control to all three positions. Check for binding or looseness. Check for leaks.
X	X		COUPLINGS. Make sure the locking action of the cam arm is functioning properly. Replace the gasket in the coupling if the old one is not usable. Check for leaks.
X			SCREENS. Check upper and lower screens. Clean, if necessary.
	X		PRESSURE REGULATOR ASSEMBLY. No service is necessary unless it is to be removed from the system (see paragraph 6-16b).

6-17. METER-REGISTER. The 3-inch meter-register (table 6-7) and the 2-inch meter-register (table 6-8) are similar in operation. The procedures apply to both.

a. PLACING IN OPERATION.

(1) Meters must be in a level position end remain full of fuel during and between deliveries, so they should be located in a low spot.

(2) Face meter in proper direction, flow is always from the meter coupler (female) to the adapter [male).

(3) Install ground rod and attach grounding wire.

(4) Remove dust cap and plug; inspect all fittings for cleanliness.

(5) Install hoses.

(6) Turn resettable counters to 0, record totalizer reading.

(7) Check frequently during operations for leaks and proper count or operation.

b. TAKING OUT OF SERVICE.

(1) Drain or pump as much fuel as possible from the meter.

(2) Remove hoses.

(3) Install dust cap and plug.

(4) Retrieve groundrod and groundwire and stow on meter frame.

c. SERVICSS. Preventive maintenance, troubleshooting, and meter calibration are covered in TM-00674A-15, Part Five.

Table 6-7. Three- Inch Meter-Register Data

Meter	
Model No.	PL3A-1A1A-TYPE-T
Flow Rate	50-650 gpm
Repeatability	±0.1% of reading
Accuracy	±0.5% of reading
Envelope	
Length	13 in
Width	8-3/4 in
Height	10 in
Weight	25 lbs
Pressure Rating (Maximum)	200 psi
Pressure Loss (Maximum flow)	15 psi
Register	
Model No.	GWD-3ST
Digits	Dual, seven-digit counters, 3/16-in size digit
Weight	4 lbs
Skid Frame	
Construction	Tubular with ground wire
Weight	9.0 lbs (less ground-rod)
Length	25 in
Width	15 in
Height	14 in

Table 6-8. Two-Inch Meter-Register Data

Meter	
Model No.	PL2A-2A1A-TYPE-T
Flow Rate	25-250 gpm
Repeatability	±0.1 of reading
Accuracy	±0.5 of reading
Envelope	
Length	9-1/2 in
Width	6-5/8 in
Height	6-15/16 in
Weight	7 lbs
Pressure Rating (Maximum)	
Pressure Loss (Maximum flow)	10 psi
Register	
Model No.	GWS2LR
Digits	Five, 3/16-in size
Weight	2 lbs
Skid Frame	
Construction	Tubular with ground wire
Weight	5 lbs
Length	18 in
Width	12 in
Height	12 in

6-18. FILTER-SEPAR4TOR. The filter-separator (table 6-9) is similar to the unit in the TAFDS (paragraph 5-1 S), and the flow through the unit is the same (figure 5-2) .

a. PLACING IN OPERATION.

(1) Level the site, and remove all rocks and metals that could be struck causing sparks which night result in fire or explosion. Prepare a suitable drainage ditch below the water drain valve to carry the extracted water away from the unit. Position the filter-seperator assembly on the site to provide equal distribution of weight across the slids. Keep on a hard surface to prevent the unit from getting stuck in soft ground.

Table 6-9. Filter-Separator Data

Dimensions	Height 67 in Width 35 in Length 72 in
Weight (dry)	720 lbs
Flow rate	350 gpm
Working pressure	75 psi
Test	Hydrostatic for no leaks at 125 psi
Temperature range	+33° F to 125° F
Relief valve	Set for 82 psi
Differential pressure indicator	Set for 15 psi difference

(2) Detach the grounding rod frm the frame and drive it a minimum of 2-1/2 feet into the ground. The earth surrounding the rod must be moist to provide a good electrical contact. In dry or sandy areas, water should be poured around the rod or salt may be packed in the hole between the rod end dry earth. Detach the grounding strap, and attach it between the rod and the frame by means of the electrical clips. Make sure the clips bite into the metal at each end to make good contact. Removal of paint may be necessary to ensure a good contact.

Do not operate the filter-seperator until it has been connected to a suitable ground. A static discharge could ignite the fuel or cause en explosion of the fuel vapor.

(3) Open the cover by loosening the nuts of the cover eye bolts and swinging the bolts to the down position. Raise the cover and swing it to one side. Check visually to be sure the canister assemblies are in place. Replace cover end swing bolts.

(4) Connect inlet and outlet hoses after first checking inlet and outlet openings for any foreign matter. Make sure hoses are properly connected and free of kinks.

(5) Make sure valves at top and bottom of liquid level sight glass are open. Close the manual vent valve on the top.

(6) Make sure the water drain valve sad the petcock under the liquid level sight glass are closed.

(7) Make sure the plug in the bottom cover is in place end secured.

(8) Be sure the hoses are connected securely.

(9) Start the system pumping unit, end open any upstress blocking valve slightly, in order to build up the pressure in the filter-seperator slowly.

(lo] Open the manual vent valve slightly.

(11) When the unit is full end at operating pressure, as evidenced by fuel emerging from the manual vent, close the vent valve.

(12) Inspect the equipment thoroughly for any visible locks.

(13) After completion of inspection, open up the downstream valve (if any) to the fully open position.

(14) Open the upstream valve to the fully open position.

(15) Check the position of the pressure differential indicator at least hourly.

(16) Make fuel quality tests (paragraphs 3-9 and 3-10) as required by operating procedures.

b. TAKING OUT OF SERVICE.

(1) With all pressure off the system, disconnect the inlet and discharge hoses. Drain them of residual fuel.

(2) Connect a hose to the 1-1/2-inch hose adapter of the manual drain valve, and open the valve to drain into a suitable trench or containers for disposal.

(3) Open the manual vent valve in the top of the assembly.

(4) Drain the liquid level sight glass of residual fuel by opening the petcock on the bottom of the tube.

(5) After thoroughly draining, close the manual drain valve and the manual vent valve.

(6) Wipe the inlet and outlet openings clean of fuel and install dust cap and dust plug.

c. SERVICES. Operator's daily services are shown in table 6-10. Refer to Part Size of TM-00674-15 for preventive maintenance, troubleshooting, and filter changing procedures.

6-19. FUEL MONITOR. The fuel monitor is the same in the AAFS and TAPDS. Refer to paragraph 5-16 for instruct ions.

6-20. OPERATION UNDER OTHER THAN NORMAL CONDITIONS. Table .5-8 applies. Refer to Part Seven of TM-06674A-15 for further information.

6-21. SECURING SYSTEM FOR REUSE , STORAGE , OR KUWEMENi. See chapter 5, section V.

6-22. DEMOLITION. See chapter 5, section VI.

Table 6-10. Filter-Separator Operator's Daily Services

Intervals			Procedure
B	D	A	B = Before Operations D = During Operations A = After Operations
X	X	X	FILTER-SEPARATOR. Inspect the filter-separator for all obvious deficiencies such as loose or missing bolts and nuts, and for bent, cracked, warped, or broken parts. Investigate any unusual operation such as erratic cycling or discharge.
X		X	VALVES. Check that all manual valves operate freely, and that the stems are not bent or broken.
X		X	PRESSURE DIFFERENTIAL INDICATOR. Inspect for loose mounting, loose connections, or other damage.
	X		LIQUID LEVEL GAGE. Inspect for leaks or other damage, paying particular attention to the fitting connections.
X	X	X	PIPING CONNECTIONS AND FLANGED AREAS. Inspect for loose or missing hardware and leaks.

CHAPTER 7

REFUELER TRUCK OPERATIONS

SECTION I

INTRODUCTION

-1. GENERAL. Refueler truck operations include he use of fuel servicing tank trucks (M49 type) nd semitrailers (N857 type) to receive, transfer, nd deliver fuel. It is assumed that the fuel andler using this manual is familiar with the type equipment in use, and has ready access, at the unit evel, to the proper equipment technical manuals or reference and study.

-2. OPERATOR QUALIFICATION. As a minimum efueler vehicle operators must:

a. Have a valid Motor Vehicle Operator's Permit, tandard Form 46, and meet the additional equirements for refueler operators in M-11240-15/3, paragraph 4-11.

b. Be qualified in MOS (Military Occupational Specialty) 3534, Refueler Operator.

c. Be familiar with and follow local traffic and vehicle regulations (civilian and military) , safe driving practices , safety precautions, and emergency procedures.

d. Know the equipment thoroughly, with particular attention to safety devices and fire-fighting aids.

e. Always THINK SAFETY and use common sense.

7-3. SAFETY PRECAUTIONS. In addition to the general precautions in chapter 1. the fol lowing apply to refueler operations:

a. When practical, the minimum distance between parked refuelers should be 25 feet in groups of not more than three, with 100 feet between groups.

b. Keep refuelers out of the path of aircraft,

c. Do not conduct fuel handling operations of any sort in a hangar, warehouse, shop, or other confined area.

d . Do not operate a refueler with a leak in the tank, piping, or other systems.

e. Check all engine exhausts daily; there should be no holes, cracks, breaks, or carbon buildup.

f. Keep all grounding and bonding connections clean, unpainted, and in good condition.

Never begin fuel transfer until bonds and grounds are made, and never disconnect bonds and grounds until fuel transfer is complete.

h. Do not kink hoses. Avoid dragging hoses and nozzles, and do not throw hoses and nozzles from aircraft.

1. Aircraft radio and radar equipment must be turned off during fueling (or defueling).

j. Fueling operations must be at least 300 feet from active ground radar equipment.

k. Keep equipment cabinets of refueler trucks clean and free of any accumulation of dirt, oil, grease, or trash.

7-4. PERSONNEL RESPONSIBILITIES AND DUTIES.

a. REFUELING GROUND VEHICLES. Refueling ground vehicles is normally a two-man operation with the refueler operator and the receiving vehicle operator sharing the effort. The refueler operator will set up the tanker bonding and grounding connections, set up the hose assemblies, start the pump, adjust manifolds and valves, and supervise and monitor the dispensing procedure. The receiving vehicle operator handles the hose and nozzle and actually dispenses fuel. When the situation al lows only one man for the operation, the refueler operator goes through the steps above, then moves the hose and nozzle to the receiver and dispenses fuel while monitoring the control panel.

b. REFUELING AIRCRAFT. Refueling aircraft requires at least two persons, except in emergencies. The refueler operator must be assisted by a person responsible for the aircraft portion of the operation to actually load the fuel into the aircraft. This aircraft representative may be a crew chief, plane captain, or lineman, and is referred to below as the loader (unloader in the case of defueling).

(1) Refueler operator duties:

(a) Position the refueler as in figure 7-1, keeping at least 10 feet from the aircraft. (including helicopter rotor

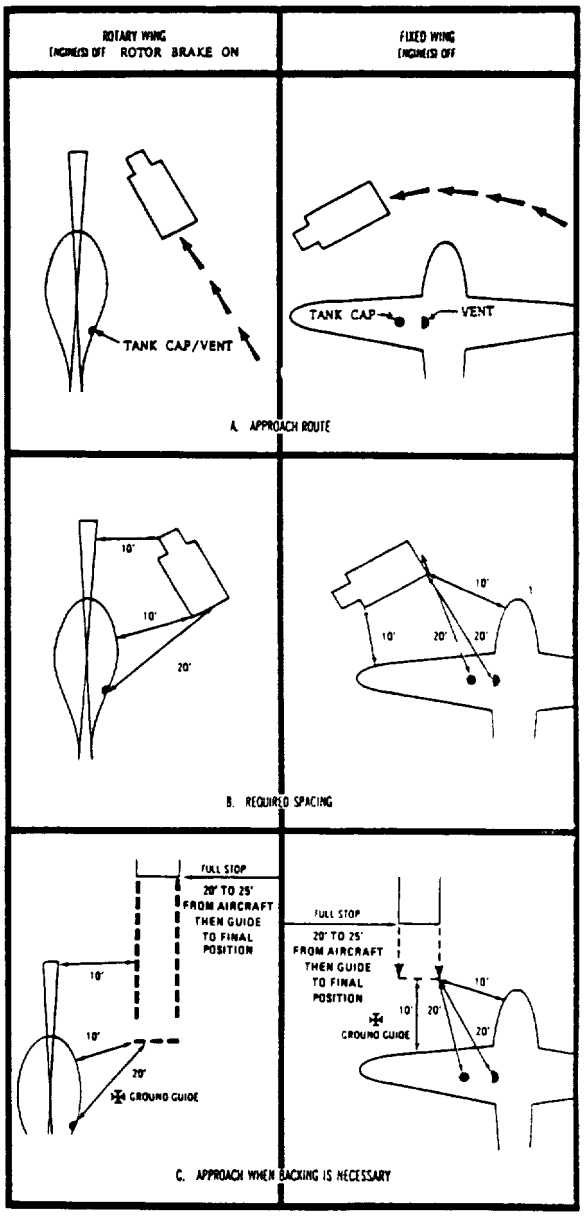

Figure 7-1. Tank Vehicle Positioning for Aircraft Refueling

blades) , so that the truck and pump engine exhausts are at least 20 feet from the aircraft fill port end tank vent. Never drive the refueler directly at the aircraft. Do not back into position if it can be avoided, but when it must be done, stop at least 25 feet away from the aircraft and have another person guide and direct the final approach. In all cases the final position must give the refueler a clear, open getaway path in case of emergency.

(b) Stop the truck engine (unless it powers the pump) and set the brake. Do not unhook a semitrailer from its tractor.

(c) Recheck the type fuel aboard to make sure it is the type for the aircraft. Check the filter-separator sight glass to make sure water has been drained.

(d) Position fire extinguishers or make sure portable flight line extinguishers are in place.

(e) Ground the refueler. Assist the loader in grounding the aircraft, and pass the hose and nozzle to him.

(f) After the loader has bonded the nozzle, opened the filler port, inserted the nozzle, and signaled “ready”, start fuel flow.

(g) Monitor fueling closely. On signal from the loader, stop the pump, adjust the valves and manifolds, and receive the hose for securing.

(h) Remove grounding equipment and stow it.

(2) Loader duties:

(a) Check that the aircraft is ready for fueling, that only authorized personnel are aboard, that radios and radars are off, and armament switches are set on SAFE.

(b) Ground the aircraft, making sure the groundwire clip is attached to a bare metal area well away from the fuel port (do not c1ip to propeller or rotor blade or to an antenna). Check that fire extinguishers are in place.

(c) Check refueler marking and fuel color to make sure the fuel is the type needed.

(d) Receive hose and nozzle from the refueler operator, and notify him of the amount of fuel needed.

(e) Bond nozzle to aircraft.

(f) Remove filler cap and insert nozzle.

(g) Refuel, monitoring closely, and never leave the nozzle unattended.

(h) Stop flow completely before removing nozzle from filler port.

(i) Replace fill cap.

(j) Remove nozzle bond, and pass hose and nozzle to refueler operator.

(3) Special precautions in aircraft refueling:

(a) Keep clear of rotor blade and propeller blade paths. Tail rotors of light helicopters are very low.

(b) Never walk between propeller blades, nor touch or move a propeller.

(c) Keep the area clear of trash or debris that can damage aircraft if sucked up by the intake, or cause personnel injury if blown about by downwash, prop wash, or jet blast.

(d) Keep clear of exhausts and exhaust vents as they remain very hot for a long time after engine shutdown.

(4) If hot refueling is used, follow the procedures of paragraph 5- 19c.

NOTE

NAVAIR 06-05-502 is the basic manual for aircraft refueling ashore. In case of conflict between this manual and NAVAIR 06-05-502, the latter will govern, and the difference should be reported oh Form NAVMC-10772 for resolution.

SECTION II

OPERATOR CHECKS AND SERVICES

7-5. PREOPERATIONAL CHECKS. Refuelers require two types of preoperational checks. One is the check of the equipment as a vehicle, such as checking tire inflation, radiator water level, and fuel quantity. This type of check is outlined in the TM for the vehicle. The other type checks the readiness of the vehicle to perform as a refueler and is the type presented here. Each day, before operations, the operator should go through the daily check list, item by item, and correct (or have corrected) any discrepancies before proceeding. The refueler truck daily checklist, appendix C, is applicable to the M49A2C and the M857. The pressure drop log, appendix D, should be kept to check the performance of the filter-separator and fuel monitor. It is recommended that the use of the check list and log be included in local SOP's.

7-6. WEEKLY CHECKS . Once each week, before operations, check the fueling system of the tank vehicle, as follows :

a. Take off the pump and line strainers and check them for dirt; then clean and replace them.

b. Check and clean the meter screens.

SECTION III

M49A2C TANK TRUCK

7-7. GENERAL. The M49A2C fuel servicing tank truck has a 1,200-gallon tank divided into two 600-gallon compartments. TM 9-2320-209-10, paragraph 61-63, explains in more detail the procedures that are outlined in this section.

7-8. M49A2C OPERATIONS.

a. FILLING THE TANK SECTIONS.

(1) Gravity Filling.

(a) Position the tank truck under a filling device or near a filling hose.

(b) Set the parking brake and stop engine.

(c) Open the rear compartment, pull out the grounding wire, and clip it to a suitable ground.

(d) Open the filler covers on the tank body.

(e) Close the delivery line gate valves, the discharge valve operating levers, the mater valve drain knob, the delivery draincock, the water separator drain valve knob, and the automatic dump valve drain tube valve knob.

(f) Fill tank sections. Do not fill sections above the level of the liquid level marker on the underside of each manhole cover. Use the dip gage to measure the amount of fuel when partial loads era desired.

(g) After filling each section, close and secure the filler cover.

(h) Disconnect the grounding wire clip end rewind wire on reel.

(2) Suction Filling.

(a) Position vehicle near fuel source.

(b) Set the parking brake and stop engine.

(c) Open the rear compartment, pull out the grounding wire, and clip it to a suitable ground.

(d) Remove the cap and attach a length of hose to the gate opening on the lower right side of the rear compartment. Remove the nozzle and place the end of the hose section in the fuel supply.

(e) Close the discharge valve control operating levers, the meter drain valve knob, the delivery pump draincock, and the water separator drain valve knob .

(f) Open the automatic dump valve drain tube valve knob and the delivery line gate valves.

(g) Follow the procedures on the caution and instruction plate on the inside of the right door of the pump compartment.

(h) Open the filler cover on the tank section to be filled.

(i) Insert the gasoline dispenser nozzle of the discharge line in the mouth of the section to be filled and squeeze the nozzle operating lever.

(j) Fill the section; do not fill above the liquid level marker on the underside of the manhole cover.

(k) After filling, close and secure the filler cover.

(1) Close the delivery line gate valves.

(m) Turn the hand throttle to the horizontal position and push in.

(n) Stop engine.

(o) Place transfer power takeoff shifting lever in the DISENGAGE position. Place transmission gear shift lever in NEUTRAL Remove hose from the lower right gate valve; drain end stow hose.

(P) Disconnect the grounding wire clip end rewind wire on reel.

b. DISCHARGING THE TANK SECTIONS.

(1) Power Discharge.

(a) Position vehicle near pumping location.

(b) Set the parking brake, leaving engine running

(c) Follow the procedures on the caution and instruction plate on the inside of the right door of the pump compartment

(d) Open the rear compartment, pull out the grounding wire, end clip to a suitable ground.

(e) Close the meter drain valve knob, the delivery pump draincock, end the water separator drain valve knob.

(f) Open the automatic dump valve drain tube valve knob.

(g) Move the discharge valve control operating lever of the tank section to be discharged to the open (out) position.

(h) Open the delivery line gate valve knob at the right side of the pump.

(i) Remove the delivery line hose from the left side of the tank body, and place nozzle into receiver opening, making sure the nozzle touches the side of the opening. Squeeze the nozzle operating lever to dispense fuel.

(j) When dispensing is complete, close the delivery line gate valve, the discharge valve control operating lever, and the automatic dump valve drain tube valve knob. Stow hose.

(k) Disconnect the grounding wire clip and rewind wire on reel; close rear compartment.

(1) Turn the hand throttle to the horizontal position and push in.

(m) Place transmission gear shift lever in NEUTRAL and transfer power takeoff shift lever in DISENGAGE.

(n) Stop engine.

(2) Gravity Discharge.

(a) Open the rear compartment, pull out the ground wire, and clip to a suitable ground.

(b) Attach hose to the gate valve on the lower right side of the rear compartment.

(c) Close the gate valve at the right side of the pump and close the delivery pump draincock.

(d) Open the gate valve to which the hose is attached.

(e) Move the discharge control valve operating lever of the tank section to be discharged to the open (out) position.

(f) Squeeze the nozzle operating lever to dispense fuel.

(g) When discharge is complete, close the discharge valve control operating lever and the gate valve to which the hose is attached.

(h) Disconnect hose, drain and stow.

(i) Disconnect the grounding wire clip and rewind wire on reel; close rear compartment.

c. CHANGING FUEL TYPE OR GRADE.

(1) Drain compartments and the piping system, including the filter-separator.

(2) Flush with 50 gallons of new product, and circulate the product back to each compartment twice.

(3) Circulate the new product through all fuel handling components, including the meter, filter-separator, and hose reels, if applicable.

(4) After flushing, dispose of flushing agent in approved containers or disposal area.

d. FORDING.

(1) Open rear compartment and install dust cap on the gate valve opening on the lower right side of the compartment.

(2) After fording, check the delivery lines to ensure that no water has entered. If necessary, drain the manifold pipes, delivery pump, meter, filter-separator and delivery lines.

(3) For further informat ion and procedures for fording operations, see TM 9-2320-209-10, paragraph 100.

SECTION IV

M857 FUEL SERVICING TANK SEMITRAILER

7-9. GENERAL. The M857 5, 000-gallon bulk haul and fuel servicing semitrailer is scheduled for delivery to the Marine Corps in 1977. Characteristics data is contained in appendix B.

TM 9-2330- 356- 14 contains complete operation and maintenance instructions which expand on the outline procedures following.

7-10. M8S7 OPERATIONS.

a. PUMP ENGINE OPERATING INSTRUCTIONS.

(1) Check engine fuel and oil levels.

(2) To start a cold engine, hold PREHEAT switch in the ON position for 1 minute. Continue holding PREHEAT switch at ON, push FUEL SOLENOID switch to RUN, and press START switch. Release when engine starts.

(3) If engine does not start after cranking for 1 minute, hold PREHEAT switch in ON position for 1 minute more and press START switch.

(4) To stop, throttle engine to a fast idle and push FUEL SOLENOID switch to STOP.

(5) If engine is restarted after a short shutdown, use of the PREHEAT switch is usually not needed.

b. FUEL TRANSFER OPERATIONS. Table 7-1 shows the valve position combinations for the fuel transfer operations possible with the M857. The START and END steps of each operation are with all valves CLOSED. Table 7-1 also appears as a data plate in the roadside control compartment of the M857.

Table 7-1. Valve Positions, M857 Fuel Transfer Operations

Operation	Valve Positions										
	A	B or C	D	E	F	G	H	J	K	M	N
1. Water Drain	O						O	O		O	O
2. Gravity Unload	O	O or O				O	O				
3. Bottom Load	O			L							
4. Bulk Delivery	O	O or O		U	O		O				
5. Self Load	O	O or O		L		O					
6. Filtered Bulk Delivery	O	O or O		U			O		O	O	
7. Kit Dispensing, Filtered	O			U			O			O	
8. Kit Dispensing, Unfiltered	O			U	O		O		O		
9. Defuel	O			L		O			O		
10. Precheck Emerg Shut-Off			O								

O = Open L = Load U = Unload

CAUTION

A. In an emergency, close valve A or pull emergency valve shutoff on the opposite side.

B. Periodically check filter-separator and reset pressure indicator to 0.

C. Use high engine speed only to attain maximum flow. Start engine before opening valves.

D. Do not exceed 100 gpm through filter when pumping diesel fuel.

SECTION V

DEFUELING

7-11. DEFUELING PROCEDURES. Fuel must be removed from aircraft (and occasionally other vehicles) for various reasons. The safety precautions and procedures of fueling apply to defueling, plus the following:

a. Vehicles will be plainly marked DEFUELER as required by current directives.

b. A vehicle marked DEFUELER will not be used to fuel a using vehicle nor will a vehicle marked REFUELER be used to remove fuel unless specifically authorized.

c. Complete preoperational checklists.

d. Make certain aircraft is located away from possible ignition sources.

e. Spot the defueler vehicle as far away from the aircraft as possible, leaving a clear and open path to drive away in case of emergency.

f. Set hand brake, and turn off lights and other electrical equipment.

NOTE

Defueling requires at least two persons.

g. Check with the unloader to make sure the aircraft is the correct one to be defueled, that all aircraft electric equipment is off, and that no repair work is in progress on the aircraft.

h. Recheck that the area within 100 feet is clear of ignition sources, that bonds and grounds are properly made, and that fire extinguishing equipment is in place. Crash crew standby assistance should be used if available,

1. Prepare defueler vehicle equipment to accept fuel.

j. The unloader will touch the suction hose nozzle to a bare metal part well away from the tank port, bond the nozzle to the aircraft, open the tank cap, and insert nozzle.

k. Begin defueling on signal from the unloader who will remain near the fuel tank to monitor the operation.

l. The unloader will signal the operator to stop defuel ing when the tank is empty, replace the tank cap, and remove nozzle bonding wire.

m. Repeat j , k, and 1 above for each tank to be emptied.

n. Secure pumps, hoses, and grounding wires.

o. Dispose of removed fuel as required by local instruct ions.

SECTION VI

EMERGENCY PROCEDURES

7-12. GENERAL . There can be no hard and fast rules for what to do in emergencies, because every situation is different. The best preparation. for emergencies is to know the dangers of fuel handling, how to use fire extinguishers, and how to spread the alarm. The fuel handler must make instant decisions and take immediate positive action.

7-13. FIRE. If a fire breaks out while fueling, these basic actions should be taken, in order:

a. First, stop the flow of fuel by stopping the pump. If the pump is afire, use the fire extinguisher. If using the pressure refueling kit, drop the deadman control to stop the pump.

b. Second, get the refueler away from equipment being refueled. If the fire is not at the nozzle, close the nozzle and pull it away from the receiver. I f the hose is burning, take the nozzle out of the tank and cut the hose between the refueler and the fire. Drive the tanker away from the area to a safe spot, dragging the hose if nesessary.

c. Use any means available to spread the alarm.

d. Attempt personnel rescue, using fire extinguishers to make a fire-free path; try to isolate and contain the fire until help arrives.

7-14. DEMOLITION. Sect ion VI, chapter 5 applies.

APPENDIX A

REFERENCES

A-1. The following publications are referred to in the text of this manual:

TM-03935V-14, Engine, Gasoline, 1-1/2 HP
TM-06674A-15, Amphibious Assault Fuel System N67HC
TM-07387B-14, Helicopter Expedient Refueling System (HERS)
TM-07661A-14, Extinguisher, Fire, Dry Chemical and Aqueous Film Forming Foam, Self Contained, Model D4. SLTW100N-MC
TM-11240-15/3 Motor Vehicle License Examiners' Handbook
TN 9-2320-209-10, Operator's Manual for Truck, 2- 1/2 Ton 6x6; including Truck, Tank, Fuel Servicing, 1,200 Gallon, M49 series.
TM 9-2330-356-14, Operator, Organizational, Direct Support and General Support Maintenance Manual; Semitrailer, Tank: S, 000 Gallon Bulk Haul and Fuel Servicing, M8S7.
NAVAIR 06-5-502, Aircraft Refueling for Shore Activities
NAVAIR 19-1-90, Tactical Airfield Fuel Dispensing System (TAFDS)

A-2. The following Army TM's have much more detail on fuels and fuel handling than is included in this manual, and could be used to develop a fuel library:

TM 10-1101, Petroleum Handling Equipment and Operations
TM 10-1105 Inspecting and Testing Petroleum Products
TM 10-1113, Petroleum Tank Vehicle Operations

APPENDIX B

M857 CHARACTERISTIC DATA

SEMITRAILER, TANK: 5,000 GALLON, BULK HAUL AND FUEL SERVICING, M857; NSN 2330-00-141-3481, P/N 8736944

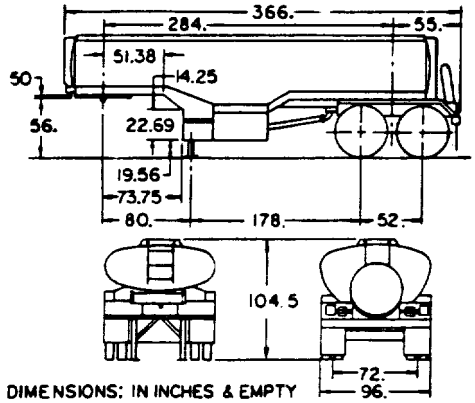

DESCRIPTION : The basic semitrailer (w/o kits) has a stainless steel single compartment tank, and provides for automatic bottom loading (with an automatic shutoff device) and gravity discharge kits are added as required for various functions.

KITS AVAILABLE :

Kit 1. Pump Assembly Kit: Centrifugal, DED (diesel engine, direct drive) , 600 gpm, 27.5 bhp, w/4 inch pump; NSN 2590-00-138-8442; P/N11685989

Kit 2. Filter Separator Kit: Liquid, Fuel, 300 gpm. Diesel, 100 gpm; NSN: 2590-00- 138-8425; P/N11685990

Kit 3. Recirculation Kit: Fuel Servicing. (used when required for fuel sampling and purging of fuel lines before fueling aircraft.) NSN: 2590-00-138-8440; P/N11685992.

Kit 4. Vapor Recovery Kit: Fuel Servicing. (Used when required in designated areas during bulk transfer of gasoline.) NSN: 2590-00-138-8434 P/N11685993.

Kit A. Dispensing Kit: Fuel, 60 gpm, Automotive. (Used w/Kits 1 and 2; can refuel two vehicles simultaneously y.) N5N : 2590-00-138-8435; P/N11685994.

Kit B. Dispensing Kit: Fuel, 100 gpm, Overwing, Aircraft. (Used w/Kits 1 and 2; can refuel two aircraft simultaneous y.] NSN 2590-00-138-8439 P/N11685991.

Kit C. Dispensing Kit: Fuel, 300 gpm, Underwing Aircraft. (Used w/Kit 2, can pressure refuel one aircraft at 300 gpm and gravity refuel one aircraft at 100 gpm.) NSN: 2590-00-138-8437; P/ N11685995.

WEIGHT (lbs)

Prime Mover, M818 5T, 6X6 Tractor	20,350
Semitrailer, M857, w/o Kits	12,840
Kit 1	1,590
Kit A and Kit 2	1,180
Kit B and Kit 2	1,310
Kit C and Kit 2	3,500
Kit 3	10
Payload: 5,000 gal. @ 6.79 lbs/gal	33,950
Tractor, Semitrailer, and Payload w/o Kits	67,140

WEIGHT DISTRIBUTION (lbs)

	No load, w/Kit 1	Full load, w/Kits 2,3, C
Front axle, tractor	10,300	10,675
Kingpin, semitrailer	3, 335	18,685
Landing leg, semitrailer	4,870	26,780
Rear Bogie, tractor	13,385	28,865
Rear Bogie, semitrailer	7,970	21,290

SHIPPING DATA

Cubic feet	2176
Square feet	250
(Height reduced to 120 in. by deflating tires.)	

CENTER OF GRAVITY

	Vertical	Horizontal From Kingpin
Empty	54 in.	198 in.
Loaded	66.5 in.	170 in.

OTHER DATA

Tires: 12.00X20, 14 ply, commercial tread; one spare
Electrical: Trailer lights 24V
pump engine, hose reel, alternator 12V
Axle type: 18,000 lbs. capacity
Brakes: Air/wedge actuated (2 per axle end)
Landing gear: Adjustable, crank-operated
Departure angle: 600
Fording depth: 24 in. max.

APPENDIX C

REFUELER TRUCK DAILY CHECKLIST

INSTRUCTIONS, Operator shall complete checklist daily prior to start of refueling operations. Number discrepancies and describe in detail in the space provided at the and of the checklist. Discrepancies should be corrected and signed off, by the responsible persons before operations start.

Location _____ Date _____

Equipment type 14- _____ Serial No. _____

Operator _____

Item and Procedure	O.K.	Discrepancy Number
1. Check electrical system with driver, check for proper operation, condition of wiring		
2. Recirculate fuel for 15 minutes, ground refueler, assemble hose to recirculate, start pump engine and pump		
3. Check pressure drop: a. Across filter-separator; enter in log b. Across fuel monitor; enter in log		
4. Check pump engine oil level		
5. Check engine for oil leaks		
6. Check exhaust pipe, spark arrester for cracks and leaks		
7. Check for leaks a. Tanks b. Pipes c. Pump		

APPENDIX C - Continued

Item and Procedure	O.K.	Discrepancy Number
7. Check for leaks - Continued d. Filter-separator e. Meter(s) f. Hose reels g. Valves		
8. Inspect hose a. Extend hose completely and check outside cover. Remove hose from service if any part shows signs of blistering, saturation, or nicks and cuts that expose reinforcing material. Turn in removed hose for salvage/repair, replace with serviceable hose. b. Check couplings. Look for coupling slippage (hose working loose from couplings). Replace hose with leaky couplings, turn in removed sections for salvage/repair. c. Check hose near couplings (within 12 inches) by pressing lightly all the way around hose, feeling for soft spots. Remove hose with weak or soft spots and turn in for salvage/repair, replace with serviceable hose. d. Test hose at normal operating pressure by running pump for a short time with nozzles closed. Look for abnormal twisting and ballooning (indications of weakening hose). If found, turn in hose for salvage/repair and replace with serviceable hose.		

APPENDIX C - Continued

Item and Procedure	O.K.	Discrepancy Number
9. Check nozzle screens Remove screens, check for bits of hose lining, dirt, and other particles; report any indications of hose deterioration or filter-separator malfunction. Clean and replace screens.		
10. Check nozzle bonding cable, bond plug, and alligator clip for condition.		
11. Check grounding cable and clips for defects.		
12. Check grounding rod aboard.		
13. Check fire extinguishers in place, pressure gage (if installed), and current inspection tag.		
14. Check dust plugs and caps in place.		
15. Test fuel quality After recirculation and completing checks above, draw fuel sample and check for color, cleanliness and brightness, cloud or haze, sediment, water, and fibrous material. Check API gravity as set forth in local SOP. If fuel does not pass tests, resample and notify supervisor; consider fuel unfit for use while awaiting instructions.		
16. Check canvas cab-cover in place and secured.		

APPENDIX C - Continued

Item and Procedure	O.K.	Discrepancy Number
17. Ear protective devices in good condition; readily available.		

Discrepancies		Corrective Action		
No.	Description	Action Taken	Work Done By (Initials)	Checked By (Initials)

APPENDIX D

PRESSURE DROP LOG

Type	Elements Installed (Date)			Vehicle No. or F/S, FM Location			Month and Year	
	Filter-Separator			Fuel Monitor				
Day	Inlet PSI (1)	Outlet PSI (2)	Drop Col(1)-Col (2)	Inlet PSI (4)	Outlet PSI (5)	Drop Col(4)-Col(5)	Fuel Sample	Remarks (Number and Explain Below)
1								
2								
3								
4								
.								
.								
.								
.								
.								
.								
.								
.								
.								
.								
.								
.								
.								
.								
.								
.								
.								
.								
.								
.								
.								
.								
.								
.								
.								
.								
.								
28								
29								
30								
31								

Remarks (Use Reverse Side if Necessary)

ALPHABETICAL INDEX

Subject	Paragraph Number
A	
AAFS (Amphibious Assault Fuel System)..	6-1
Operation	6-14
Site Preparation	6-12
Adapter, Hose	5-4
	6-3
AFFF (Aqueous Film Forming Foam)	2-4
	2-13
Aircraft Refueling	5-19
	7-4
Anesthetic Effect of Fuel..	1-6
Appearance Test	3-9
Asphyxiant Effects of Fuel	1-6
Automatic Fuel Nozzles	1-3
B	
Bacteria, as Fuel Contaminant..	3-7
Berms, Construction of	5-10
	6-12
Berms, Use of.	5-10
Bonding, Definition of	1-2
Booster Station, AAFS	6-11
Bright, Definition of	3-4
C	
Can, Gasoline, 5-Gallon	4-1
	4-6
Carbon Dioxide	2-4
	2-9
Carbon Monoxide, Hazard of..	1-6
Checks, Preoperational, Refueler Vehicles	7-5
Chemicals, Dry (See Dry Chemicals)	
Classes of Fires	2-5
Clean, Definition of	3-3
Closures, 55-Gallon Drum	4-2
Clothing, Protective	1-10
Cloud, Appearance of in Fuel	3-9
Cloud, Definition	3-5
Color Code of Fuels	3-9
Conditions, Operating, Other Than Normal, AAFS.	6-20
Conditions, Operating, Other Than Normal, TADS.	5-18
Conduction, Definition of.	2-3
Containers, Fuel, Emptying...	4-8
Containers, Fuel, Filling	4-5

ALPHABETICAL INDEX - Continued

Subject	Paragraph Number
C - Continued	
Containers, Fuel, 55-Gallon Can.	4-2
Containers, Fuel, 5-Gallon Drum	4-1
Contamination, Fuel, Appearance of.	3-9
Contamination, Fuel, Definition of.	3-1
Control, in Fires, of Air	2-4
Control, in Fires, of Fuel	2-2
Control, in Fires, of Heat	2-3
Convection, Definition of	2-3
Coupling, Hose	5-4 6-3
Coupling, Wye	5-4
Cutting Operations, Precautions for.	1-2
D	
Dearming, Aircraft	5-19
Defueling Procedures	7-11
Demolition	5-26
Dikes (See Berms)	
Dilution of Air in Fire Fighting..	2-4
Dispensing Procedures, Aircraft..	5-19
Dispensing Procedures, Ground Vehicles	7-4
Drum, Fuel, Collapsible	5-21
Drum, Fuel, 55-Gallon	4-2
Dry Chemicals, Use of in Fire Extinguishers	2-10 2-13
Dusts, Hazards of	1-5
E	
Electric Equipment, Use of	1-2
Electric Equipment, Fires in	2-5
Electrical Storms	1-3
Electricity, Static	1-2
Elements of Fire	2-1
Elements, Filter-Separator.	5-15
Elements, Fuel Monitor	5-16
Emergency Procedures, Refueler Vehicles	7-12 7-13
Emptying Fuel Containers	4-8
Existent Gum	3-6
Explosion, Definition of	1-1
Explosion-Proof Equipment, Use of	1-2
Extinguishers, Fire, AFFF	2-13
Extinguishers, Fire, Carbon Dioxide.	2-9
Extinguishers, Fire, Dry Chemical	2-10

ALPHABETICAL INDEX - Continued

Subject	Paragraph Number
E - Continued	
Extinguishers, Fire, First Aid	2-1
	2-6
Extinguishers, Fire. Foam, portable	1-8
Extinguishers, Fire, Hand, Use and Maintenance	2-12
Extinguishers, Fire, Soda-Acid	2-7
Extinguishers, Fire, Water	2-11
F	
Fibrosis Produced by Dust	1-5
Fill Levels, Cans and Drums	4-6
Filter, Microbic	3-8
Filter-Separator	5-4
	5-15
	5-22
	6-7
	6-18
	7-8
	7-10
Fire, Causes of	1-2
Fire, Classes of	2-5
Fire, Definition of	1-1
Fire, Elements of	2-1
Fire Extinguishing	2-1
	2-6
	7-13
Fire Prevention	1-3
Fire Triangle	2-1
First Aid for Fuel Contact	1-10
Flushing Fuel Systems	3-14
	7-8
Foam, Aqueous Film Forming	2-4
Foam, Use of in Fire Fight ing	2-2
	2-4
	2-8
Fog, Water	2-4
Fuel, Contact of With Skin or Eyes	1-10
Fuel, Containers, 55-Gallon Drum	4-2
Fuel, Containers, 5-Gallon Can	4-1
Fuel, Contamination of	3-1
Fuel, Control of in Fire Fighting	2-2
Fuel, Dangers of	1-1
Fuel, Hazards to Health of	1-4
Fuel Hoses	5-4
	5-21
	6-3
	7-5

ALPHABETICAL INDEX - Continued

Subject	Paragraph Number
F - Continued	
Fuel Monitor	5-7
	5-16
	5-21
	5-22
	6-8
	6-19
Fuel , Nozzles, Automatic	1-3
Fuel Pumps	5-14
	5-21
	5-22
	6-3
Fuel, Quality Control of	3-2
Fuel Tanks	5-3
	5-13
	6-2
	6-14
Fuel Trucks, Tank	7-1
Fuel Types, Changing	3-4
G	
Gage, Go/ No-Go	5-16
Gas, Definition and Hazards of	1-6
Gravity, API, Definition of	3-10
Gravity, Specific, Definition of	3-10
Gravity Test of Fuel	3-10
	3-11
Ground, Definition of	1-2
Ground, Rod, Installation of	5-15
	5-16
H	
Health Hazards	1-4
Heating, Spontaneous	1-2
HERS (Helicopter Expedient Refueling System)	5-20
Hose Assemblies	5-4
	5-21
	6-3
Hose, Fuel Content of	3-13
Hose, Refueler Vehicle, Inspection of	7-5
Hot Refueling	5-19
Hydrometer, Use of	3-10

ALPHABETICAL INDEX - Continued

Subject	Paragraph Number
I	
Ignition, Control of Sources of	1-3
Irritants, Gas and Vapor	1-6
M	
Manifold, Drum-Unloading	5-4
ManifoId, Fuel Disposing	5-4
Manifold, Skid-Mounted	5-4
Matches, Prohibition of	1-2
Meter, HERS	5-22
Meter, TAFDS	5-8
	5-17
Meter-Register, AAFS	6-6
	6-17
Microbiological Growth	3-7
Micron Scale	3-8
Micronic Filter	3-8
Mist, Definition of	1-8
Monitor, Fuel	5-7
	5-16
	5-22
	6-8
	6-19
Muffler, Spark-Arrester	1-3
	5-22
N	
Narcotic Effect of Fuel	1-6
Nozzle, Fuel, Automatic	1-3
Nozzle, Fuel, Gravity (Overwing)	5-4
	5-21
Nozzle, Fuel, Pressure (Single Point, Underwing)	5-4
	5-21
Nozzle Stand	5-11
	5-21
O	
Operator Qualifications for Refueler Vehicles	7-2
Oxygen Deficiency as Health Hazard	1-9
P	
Particles as Contamination, Sizes of	3-8
Poison, Dusts	1-5

ALPHABETICAL INDEX - Continued

Subject	Paragraph Number
P - Continued	
Poison, Gas and Vapor	1-6
Poison, Lead	1-5
Pressure Drop, Filter-Separator	5-15
Pressure Drop, Fuel Monitor	5-16
Pressure Log	5-15
	5-16
Pressure Regulator	6-5
	6-11
	6-16
Protective Clothing	1-10
Pump, Calculation of Lift Capacity of	6-11
Pump, 100 gpm	5-22
Pump, 350 gpm	5-4
	5-14
Pump, 600 gpm	5-4
	6-13
	6-15
Q	
Quality Control of Fuel, Aids To	3-12
	3-13
Quality Control of Fuel, Definition of	3-2
Quality Control of Fuel, Field Tests for	3-9
	3-10
	3-14
Quality Control of Fuel, Test Intervals for	3-11
R	
Radiation as Means of Heat Transfer	2-3
Recirculation, Definition of	3-13
Recirculation Time, Calculation of	3-13
Refueler Operator Qualifications	7-2
Refueling Aircraft	5-19
	7-4
Refueling Ground Vehicle	7-4
Refueling Vehicle, M49A2C	7-S
	7-7
	7-8
Refueling Vehicle, M857	7-5
	7-9
	7-10
Refueling Vehicle, Positioning of	7-4
Repair Kit, General, AAFS	6-9

ALPHABETICAL INDEX - Continued

Subject	Paragraph Number
R - Continued	
Repair Kit, General TADS	5-2
Rubbish, Danger of	1-2
S	
Safety Precautions	1-3
	1-10
	4-5
	7-3
Screens	3-8
Sediment	3-8
	3-9
Settling Time	3-12
Site Preparation, TAFDS and AAFS	5-10
	6-12
Site Selection. TAPDS and AAFS	5-10
Smoking, Restriction of	1-2
Spark Arrester Mufflers and Exhausts	1-3
	5-21
Sparks as Heat Sources	1-2
Spontaneous Heating, Combustion	1-2
Suction Stub Assembly	5-4
	6-5
T	
TAFDS Assembly	5-12
TAFDS Description	5-1
TAFDS Operation	5-19
Tank Chest, AAFS	6-2
Tank Chest, TAFDS	5-2
Tanks, Fuel, Collapsible	5-3
	6-3
Tanks, Fuel, Collapsible, Installation of	5-10
	5-13
	6-13
Tanks, Fuel, Collapsible, Preventive Maintenance for	5-13
Tanks, Fuel, Collapsible, Serviceability Standards for	5-13
Tetraethyl Lead as Poison	1-S
	1-6
Toxic (See Poison)	
Trucks , Tank	7-14
Twin Agent Fire Extinguisher	2-13

Subject	Paragraph Number
V	
Valves, Gate	**5-4**
	6-3
Vapor, Control of	1-3
Vapor, Hazards of	1-6
W	
Water as Fire Extinguisher	2-1
	2-11
Water as First Aid for Fuel Contact	1-10
Welding Operations	1-2
Wye Coupling	5-4